Chillgard® LE Refrigerant Monitor

Instruction Manual

⚠ WARNING

THIS MANUAL MUST BE CAREFULLY READ BY ALL INDIVIDUALS WHO HAVE OR WILL HAVE THE RESPONSIBILITY FOR INSTALLING, USING OR SERVICING THE PRODUCT. Like any piece of complex equipment, this instrument will perform as designed only if it is installed, used and serviced in accordance with the manufacturer's instructions. OTHERWISE, IT COULD FAIL TO PERFORM AS DESIGNED AND PERSONS WHO RELY ON THIS PRODUCT FOR THEIR SAFETY COULD SUSTAIN SEVERE PERSONAL INJURY OR DEATH.

The warranties made by Mine Safety Appliances Company with respect to the product are voided if the product is not used and serviced in accordance with the instructions in this manual. Please protect yourself and others by following them. We encourage our customers to write or call regarding this equipment prior to use or for any additional information relative to use or repairs.

IN NORTH AMERICA: 1-800-MSA-INST. or FAX (724) 776-9783
IN CANADA: 1-800-267-0672 or FAX (416) 663-5908
MSA INTERNATIONAL (412) 967-3354 or FAX (412) 967-3373

© MINE SAFETY APPLIANCES COMPANY 2009 - All Rights Reserved

This manual is available on the internet at www.msanet.com

Manufactured by

MSA NORTH AMERICA

P.O. Box 427, Pittsburgh, Pennsylvania 15230

(L) Rev 6 **10037693**

Chillgard LE Refrigerant Monitor

MSA Permanent Instrument Warranty

1. **Warranty-** Seller warrants that this product will be free from mechanical defect or faulty workmanship for a period of two years from date of shipment, provided it is maintained and used in accordance with Seller's instructions and/or recommendations. This warranty does not apply to expendable or consumable parts whose normal life expectancy is less than one (1) year such as, but not limited to, non-rechargeable batteries, filament units, filter, lamps, fuses etc. The Seller shall be released from all obligations under this warranty in the event repairs or modifications are made by persons other than its own or authorized service personnel or if the warranty claim results from physical abuse or misuse of the product. No agent, employee or representative of the Seller has any authority to bind the Seller to any affirmation, representation or warranty concerning the goods sold under this contract. Seller makes no warranty concerning components or accessories not manufactured by the Seller, but will pass on to the Purchaser all warranties of manufacturers of such components.
   THIS WARRANTY IS IN LIEU OF ALL OTHER WARRANTIES, EXPRESSED, IMPLIED OR STATUTORY, AND IS STRICTLY LIMITED TO THE TERMS HEREOF. SELLER SPECIFICALLY DISCLAIMS ANY WARRANTY OF MERCHANT ABILITY OR OF FITNESS FOR A PARTICULAR PURPOSE.

2. **Exclusive Remedy-** It is expressly agreed that Purchaser's sole and exclusive remedy for breach of the above warranty, for any tortious conduct of Seller, or for any other cause of action, shall be the repair and/or replacement at Seller's option, of any equipment or parts thereof, which after examination by Seller is proven to be defective. Replacement equipment and/or parts will be provided at no cost to Purchaser, F.O.B. Seller's Plant. Failure of Seller to successfully repair any non-conforming product shall not cause the remedy established hereby to fail of its essential purpose.

3. **Exclusion of Consequential Damage-** Purchaser specifically understands and agrees that under no circumstances will seller be liable to purchaser for economic, special, incidental or consequential damages or losses of any kind whatsoever, including but not limited to, loss of anticipated profits and any other loss caused by reason of non-operation of the goods. This exclusion is applicable to claims for breach of warranty, tortious conduct or any other cause of action against seller.

⚠ WARNING

1. Each instrument described in this manual must be installed, operated, and maintained in strict accordance with its labels, cautions, warnings, instructions, and within the limitations stated.
2. These monitors must not be installed in outdoor areas or in areas or locations where explosive concentrations of combustible gases or vapors might occur in the atmosphere: Class 1, Group A, B, C, and D areas as defined by the NEC. Because the monitors are not explosion-proof, they must be located in non-hazardous areas.
3. The Chillgard LE Refrigerant Monitor is designed to detect particular refrigerant gases or vapor at ambient atmospheric pressures and temperatures. The unit will not detect refrigerant gas at conditions outside the range specified in this manual.
4. As with all gas detection instruments of this type, high levels of or long exposure to certain compounds in the tested atmosphere contaminate the sensor. In atmospheres where the monitor may be exposed to such materials, calibration must be performed frequently to ensure that system operation is dependable and its indications accurate.
5. The Chillgard LE Refrigerant Monitor must not be painted. Painting will interfere with the sampling process of the instrument. If painting is being done in an area where the instrument is located, care must be exercised to insure that paint is not put or splashed on the instrument.
6. The only absolute method to assure the proper overall operation of a gas detection instrument is to check it with a known concentration of the gas for which it has been calibrated. Consequently, a calibration check must be included as part of the routine inspection of the system.
7. The sensor is a sealed unit. Do not attempt to modify or adjust the sensing cell.
8. Use only genuine MSA replacement parts when performing any maintenance procedures provided in this manual. Failure to do so may seriously impair instrument performance. Repair or alteration of the Chillgard LE Refrigerant Monitor, beyond the scope of these maintenance instructions or by anyone other then an authorized MSA service person, could cause the product to fail to perform as designed, and persons who rely on this product for their safety could sustain serious personal injury or death.
9. Ensure that the Chillgard LE Refrigerant Monitor is installed in a clean and dry area as possible.Install splash or rain shields on the

instrument to keep water and other contaminants away from the instrument. If you fail to follow this warning, equipment damage can occur.

10. Ensure that the Chillgard LE Refrigerant Monitor and the area the instrument is monitoring is at the same temperature before operation of the instrument; otherwise, condensation will form and possibly clog or fill the gas sensor in the instrument rendering the instrument inoperable.
11. Protect the Monitor from vibration and heating; otherwise, improper operation may result, which can result in personal injury or death.
12. Do not exceed the relay contact ratings listed in Section 1, TABLE 1-1; otherwise, relay operation may fail, which can result in personal injury or death.

FAILURE TO FOLLOW THIS WARNING CAN RESULT IN SERIOUS PERSONAL INJURY OR DEATH.

Table of Contents

Chapter 1
General Information 1-1

Figure 1-1. Identification Label Location 1-1
Terminology Used in this Manual 1-2
General Description 1-3
Applications 1-3
Table 1-1. General Operating Specifications for all Models 1-4
Table 1-2. Typical Chillgard LE / R-11 Cross-Sensitivity Response Data[2] 1-5
Table 1-3. Typical Chillgard LE / R-12 Cross-Sensitivity Response Data[2] 1-6
Table 1-4. Typical Chillgard LE / R-22 Cross-Sensitivity Response Data[2] 1-6
Table 1-5. Typical Chillgard LE / R-123 Cross-Sensitivity Response Data[2] 1-7
Table 1-6. Typical Chillgard LE / R-134 A Cross-Sensitivity Response Data[2] 1-8

Chapter 2
Installation and Set-up 2-1

Location of the Monitor 2-1
Instrument Location Guidelines 2-1
Guidelines for Locating the Sampling Point(s) 2-1
⚠ WARNING 2-1
Figure 2-1. Typical Monitor Installation 2-2
Sensor Location 2-3
Pumped Units 2-3
Diffusion Units 2-4
⚠ CAUTION 2-4
Equipment Configuration 2-5
Activity in the Room 2-5
Unpacking the System 2-6
Initial Inspection 2-6
⚠ CAUTION 2-6

Mounting the Unit 2-7
Five rules for proper mounting 2-7
Mounting 2-7
⚠ WARNING 2-7
⚠ WARNING 2-7
Figure 2-2. LE Mounting Dimensions 2-8
Wiring Connections 2-9
Opening the Unit 2-9
Wiring 2-9
⚠ CAUTION 2-9
⚠ CAUTION 2-9
Figure 2-3. LE Electrical Connections 2-10
For 24 V DC or AC Wiring 2-11
For 110/220 VAC Wiring 2-11
Analog Signal Output Wiring 2-11

Chapter 3
Start-up and Initial Adjustments 3-1

Operation 3-1
Start-Up 3-1
General Calibration (All Models) 3-2
Introduction 3-2
Display Screens 3-2
Figure 3-1a. Display Screen Overview 3-3
Figure 3-1b. Display Screen Overview Continued .3-4
Figure 3-2a. Start-up
and Normal Operation Screens 3-5
Figure 3-2b. Start-up
and Normal Operation Screens Continued . .3-6
Figure 3-3a. Setup Screens 3-7
Figure 3-3b. Setup Screens Continued 3-8
Figure 3-3c. Setup Screens Continued 3-9
Figure 3-4a. Span Calibration 3-10
Figure 3-4b. Span Calibration Continued 3-11
Figure 3-5. Zero Calibration 3-12
Figure 3-6. Check Calibration 3-13
Figure 3-7a. Diagnostic Screens 3-14
Figure 3-7b. Diagnostic Screens Continued 3-15

Figure 3-8a. Data Screens 3-16
Figure 3-8b. Data Screens Continued 3-17
Figure 3-9. Sequencer Set-up Screens 3-18
Figure 3-10. Sequencer Setup Screen 3-19
Figure 3-11. Alarm Level Screen 3-20
Figure 3-12. Alarm Latching Screen 3-21
Figure 3-13. Alarm Latching Screen 3-22
Figure 3-14. Audio Alarm Screen 3-23
Figure 3-15. Analog Output Screen 3-24
Figure 3-16. Setup Time 3-25
Figure 3-17. Setup Log 3-26
Figure 3-18. Setup Password 3-27
Figure 3-19. Review Data 3-28
Figure 3-20. Review Log 3-29

Chapter 4
Calibration 4-1

Figure 4-1. Calibration Equipment 4-1
⚠ WARNING 4-1
Diffusion Version Calibration 4-1
Calibration Equipment - (FIGURE 4-1) 4-1
Initial Calibration Procedures 4-2
Preparation for Calibration 4-2
Initial Calibration 4-2
⚠ CAUTION 4-2
⚠ CAUTION 4-2
Figure 4-2. Applying Calibration Gas
to the Chillgard LE Refrigerant Monitor 4-3
Calibration Guidelines 4-4
Calibration Equipment 4-4
Calibration Check Procedure 4-5
Applying Calibration Gases to the Instrument 4-5
⚠ WARNING 4-5
Single or Four-Point Pumped Version Calibration 4-6
Introduction 4-6
Calibration Equipment 4-6
⚠ CAUTION 4-6
Figure 4-3. Kit Components 4-7

⚠ CAUTION 4-7
Table 4-1. RP Calibration Gases 4-8
Calibration Procedures 4-8
Preparation for Calibration 4-8
⚠ WARNING 4-8
⚠ CAUTION 4-8
⚠ CAUTION 4-8
Initial Calibration 4-9
Calibration Guidelines 4-9
Calibration Equipment 4-10
Calibration Check Procedure 4-10
Zeroing the Monitor 4-11
⚠ WARNING 4-11
Figure 4-4. Using Zero Scrubber for Zero Calibration 4-11
Figure 4-5. Using Zero Gas Cylinder for Zero Calibration 4-11
Figure 4-6. Span Calibration 4-12
⚠ CAUTION 4-12
⚠ CAUTION 4-13
⚠ WARNING 5-1

Chapter 5
Service and Replacement Parts 5-1

Troubleshooting Guidelines 5-1
Table 5-1.Troubleshooting Guidelines 5-1
Table 5-2. Replacement Parts List 5-4
Table 5-3. Calibration Accessories Parts List 5-5
Service and Assistance 5-5

Chapter 6
Data Logging 6-1

Log Size 6-1
Last Values 6-1
Number of Data Points Used 6-1
User Setup Options 6-1
Viewing Alarms/Events and Data 6-1

Appendix A
Installation Outline Drawings A-1

Figure A-1. Chillgard LE Installation Drawing A-1
Figure A-2. Installation Drawing Continued A-2
Figure A-3. Installation Drawing Continued A-3
Refrigerant Monitor Startup Report A-4

Appendix B
RS-485 Output B-1

Table B-1. Dip Switch Positions B-1
Table B-2. Sensor Unit Register Addresses B-2

Appendix C
RS-232 Output C-1

Introduction C-1
RS-232 Output C-1
Table C-1. RS-232 Parameters C-2
Table C-2. Information Structure
(Chillgard LE Monitor) C-2
Table C-3. Data Structure C-3
Table C-4. Alarm Structure C-3
Table C-5. Alarms and Events C-4
Table C-5. Alarms and Events C-4

Chapter 1
General Information

The Chillgard LE Refrigerant Monitor provides a continuous indication of a refrigerant concentration in air. It is capable of monitoring a refrigerant from 0 to 1000 parts per million (ppm). Each instrument is factory-calibrated to a certain full-scale value of a specific refrigerant.

All Chillgard LE Refrigerant Monitors use infrared photo-acoustic sensors. These sensors give an indication of refrigerant levels without requiring oxygen to be present. Also, the sensors are not poisoned or degraded in the presence of most silicon or sulfur compounds.

Each Chillgard LE Refrigerant Monitor is placed in an area where a refrigerant is anticipated or must be controlled. The Monitor operates in either the Diffusion style (gas diffuses into the sensor through the opening located at the bottom of the unit) or the Pumped style (an internal pump draws the sample into the sensor from a remote location). The gas sensor determines the refrigerant concentration and outputs an electrical analog signal proportionate to the concentration.

The Chillgard LE Refrigerant Monitor contains all components necessary to properly sample an area or duct for a refrigerant.

This manual describes all of the various Chillgard LE Refrigerant Monitors, although your monitor may not be equipped with all of the options available.

To help determine what options are on your unit, see the identification label on the side of the instrument (FIGURE1-1).

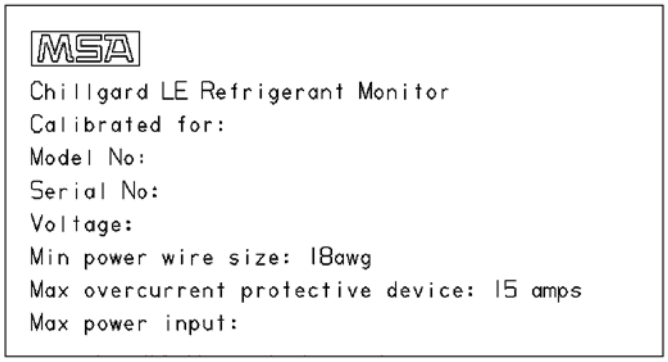

Figure 1-1. Identification Label Location

This label contains:

- model number
- the refrigerant that the unit will detect
- information concerning proper voltages and frequency required to power the unit

Terminology Used in this Manual

FLOW RATE:

Volume of gas drawn through the sample line per minute.

EXHAUST GAS:

Sample gas after it passes through the sensor.

FRESH AIR:

Air that does not contain refrigerant or other contaminants. Contamination with refrigerant gas would interfere with the calibration and the flushing of the instrument.

ZERO:

A zero (0) output usually indicates ambient air present or no refrigerant gases present.

SCRUBBER:

An activated carbon filter which removes and cleans the span gas in the calibration operation prior to exhausting excess gas to ambient air.

ZEROING:

The process of placing a zero indication on the output of the instrument.

SPAN:

A full-scale or up-scale reading on the output of the instrument.

SPANNING:

The process of placing a full-scale or up-scale output of the instrument.

SPAN GAS VALUE:

The gas “concentration” that gives the instrument a full-scale or up-scale output; this value is usually printed on the gas cylinder.

General Description

The Chillgard LE Refrigerant Monitor:

- provides a continuous indication of a refrigerant gas concentration
- operates on the photo acoustic principle, and measures the concentration of a refrigerant in a complex mixture of background gases.

  In the photo acoustic principle, sample gas is delivered to an enclosed chamber which is periodically bombarded with infrared (IR) radiation. If the target gas is present, it absorbs IR with each pulse of light. These pulses are miniature sound waves which are picked up by a microphone. The sound level is directly proportional to the target gas concentration present in the gas chamber.
- is capable of measuring a refrigerant 0 to 1000 ppm full scale
- is housed in a rugged plastic enclosure
- has a standard 4 to 20 mA and RS-485 output
- has an LCD display to indicate refrigerant concentration as well as power, fault and alarm conditions
- is highly selective to enable operation in areas with varying humidity or in areas containing other contaminants. It may be used for applications requiring long-term stability and low maintenance.

Applications

The Chillgard LE Refrigerant Monitor is factory-calibrated for a refrigerant and can be used for applications such as:

- ventilation control
- ambient air monitoring for health and safety purposes.

Table 1-1. General Operating Specifications for all Models

PERFORMANCE SPECIFICATIONS[1]	
LINEARITY	20 to 100 ppm ±5 ppm 100 to 1000 ppm ±6% of reading
REPEATABILITY	±8 ppm
WARM-UP TIME	10 minutes
RESPONSE TIME	50% of a step-change in < 70 seconds
OPERATING TEMP.	0 to 40°C (32 to 104°F)
TEMP. EFFECT	< 4% / 10° C
RELATIVE HUMIDITY	0 to 95%, RH non-condensing
RH EFFECT	R11: less than 3% full scale Other refrigerants: less than 1.5% full scale
OPERATING SPECIFICATIONS	
POWER REQUIREMENTS	24 VDC, +10%, -0%, 1A 24 VAC, ±10%, 50/60 Hz, 1 A 100 to 240 VAC, 50/60 Hz, .4A
ANALOG OUTPUT	4 to 20 mA, non-isolated, sourcing
DEFAULT ALARM VALUES	R123: 50, 150, 300 ppm Other applications: 50, 150, 1000 ppm
MAX. OUTPUT SIGNAL LOAD	500 ohms
TROUBLE RELAY	Normally energized, Form C contact 240 VAC, 5 amp resistive SPDT
ALARM 1 RELAY	1 relay, Form C contacts: 240 VAC, 5 amps resistive SPDT
ALARM 2 RELAY	1 relay, Form C contacts: 240 VAC, 5 amps resistive SPDT
ALARM 3 RELAY	1 relay, Form C contacts: 240 VAC, 5 amps resistive SPDT
AUDIO ALARM DRIVE OUTPUT	24 VDC 50-ohm load maximum (available only with non-beacon models)
DIMENSIONS	14.7" high x 11.2" wide x 5" deep (373 mm high x 284 mm wide x 127 mm deep)
WEIGHT PUMPED VERSION	9.5 pounds (4.308 kg.)
SAMPLE FLOW RATE PUMPED VERSION	Typically 1.5 LPM; . .75 LPM with maximum tubing length
MAXIMUM SAMPLE TUBING LENGTH PUMPED VERSION	300 feet with 1/8" ID tubing
MAXIMUM EXHAUST TUBING LENGTH PUMPED VERSION	30 feet with 1/4" ID tubing

TRANSPORT AND STORAGE CONDITIONS	
TEMP.	-40 to 60° Centigrade (-40 to 140°F)
HUMIDITY	0 to 99% relative humidity
POLLUTION DEGREE	2
INSTALLATION CATEGORY	II
ALTITUDE	2000 meters max.

Table 1-2. Typical Chillgard LE / R-11 Cross-Sensitivity Response Data[2]

GAS	CONCENTRATION (PPM)	EQUIVALENT PPM R-11
Acetone	100	14
Methyl Ethyl Ketone	100	32
Methanol	1000	130
iso-Propanol	500	400
Methylene Chloride	100	0
Xylene	100	0
Ammonia	50	0
R-113	100	25
R-11	100	100
R-22	100	30
R-12	983	490
R-134 A	100	20
R-123	100	3
Propane	0.6%	18
Ethylene	500	20

TEST CONDITIONS: Calibrated 0-1000 PPM R-11 in N_2; Temperature: 25°C

Table 1-3. Typical Chillgard LE / R-12 Cross-Sensitivity Response Data[2]

GAS	CONCENTRATION (PPM)	EQUIVALENT PPM R-12
Acetone	100	3
Methyl Ethyl Ketone	1000	25
Methanol	1000	2
Methylene Chloride	1000	14
Trichloroethylene	1000	167
Ethyl Acetate	1000	22
Xylene (ortho-Xylene)	1000	5
R-113	100	35
R-11	100	5
R-22	100	1
R-12	100	100
R-134 A	100	2
R-114	100	45
TEST CONDITIONS:	Calibrated 0-1000 PPM R-12 in N_2; Temperature: 25°C	

Table 1-4. Typical Chillgard LE / R-22 Cross-Sensitivity Response Data[2]

GAS	CONCENTRATION (PPM)	EQUIVALENT PPM R-22
Acetone	100	<1
R-11	100	16
R-123	100	35
R-134 A	100	25
R-132 A	100	40
R-22	100	100
R-113	100	39
TEST CONDITIONS:	Calibrated 0-1000 PPM R-22 in N_2; Temperature: 25°C	

Table 1-5. Typical Chillgard LE / R-123 Cross-Sensitivity Response Data[2]

GAS	CONCENTRATION (PPM)	EQUIVALENT PPM R-123
Acetone	100	22
Methyl Ethyl Ketone	500	48
Methanol	100	2
iso-Propanol	100	5
Methylene Chloride	1000	14
Trichloroethylene	1000	4
Ethyl Acetate	100	42
Xylene (ortho-Xylene)	1000	5
Ammonia	910	7
Natural Gas	1000	5
R-113	100	80
R-11	100	<1
R-22	100	4
R12	100	8
R-134 A	100	140
R-123	100	100

TEST CONDITIONS: Calibrated 0-1000 PPM R-123 in N_2; Temperature: 25°C

Table 1-6. Typical Chillgard LE / R-134 A Cross-Sensitivity Response Data[2]

GAS	CONCENTRATION (PPM)	EQUIVALENT PPM R-134 A
Acetone	100	15
Methyl Ethyl Ketone	500	30
Methanol	100	1
iso-Propanol	100	3
Methylene Chloride	1000	10
Trichloroethylene	1000	3
Ethyl Acetate	100	28
Xylene (ortho-Xylene)	1000	3
Ammonia	910	5
Natural Gas	1000	3
R-113	100	55
R-11	100	<1
R-22	100	3
R12	100	6
R-134 A	100	100
R-123	100	70

TEST CONDITIONS: Calibrated 0-1000 PPM R-134 A in N_2; Temperature: 25°C

1. **No performance approval from third party agency.**
2. **Tables are for reference only. Device is not to be used to measure gases other than the refrigerant gas marked on label.**

Chapter 2
Installation and Set-up

Location of the Monitor

⚠ WARNING

This unit must not be located in areas that may contain a flammable mixture of gas and air; otherwise, an explosion may occur.

The monitor performance is dependent on its location and sensing pick-up location(s). Follow the guidelines below before mounting the monitor.

Instrument Location Guidelines

1. Select a location where personnel will see the front panel or the optional beacon before they enter the equipment room or the area where the monitoring point is located.
2. Mount the unit vertically; do not mount the unit to structures subject to vibration and shock, such as piping and piping supports.
3. Do not locate the unit near an excessive heat source or in wet and damp locations.
4. Do not mount the unit where it will be exposed to direct solar heating.
5. For proper cooling, allow at least three inches clearance around all surfaces except for the mounting surface.
6. Mount the unit so the front panel is easily seen and accessed for service and calibration.

Guidelines for Locating the Sampling Point(s)

Due to the wide variation in equipment room layouts, each situation must be analyzed individually. A sampling point may be remotely located up to 300 feet from the monitor in an area where refrigerant vapors are most likely to leak or accumulate (FIGURE 2-1).

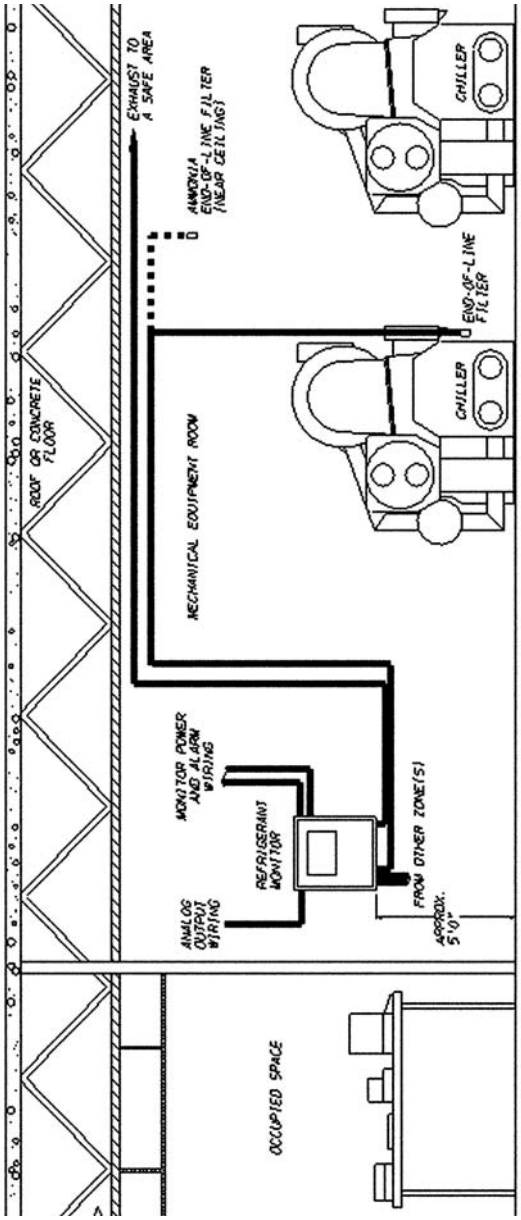

Figure 2-1. Typical Monitor Installation (monitors without sequencer option have one sampling port; those with sequencer have four ports)

Sensor Location

Pumped Units

Pumped units use an internal sample pump to pull refrigerant gas from a remote location(s). The visual indication for the unit is located on the front of the unit. Other outputs are available on the device which can be used to provide indication of gas concentration, alarm status, and instrument status.

Refrigerants concentrate near the floor. In typical mechanical equipment room applications, sampling 12-18 inches above the floor is sufficient for early warning and to provide adequate protection for someone working close to the floor. If it is expected that an occupant's breathing zone may be less than 12-18 inches off the floor, locate the sampling point accordingly.

NOTE: Select sampling locations that result in the shortest possible line length in order to reduce transport time.

Consider the following guidelines when selecting the location for the sampling point(s).

1. Most refrigerants are heavier than air and sink to the floor or accumulate in low areas.
2. Place the end of the sampling line in an area that provides the instrument with a representative sample; ventilation Smoke Tubes (P/N 458480) are useful in determining air flow patterns in ambient sampling areas.
3. Properly exhaust the instrument to a safe area or to outside atmosphere.
4. Ensure the sampling area is free of particulate matter and condensing moisture; ensure sample lines will not draw moisture up into the line.

   NOTE: The sample gas must be adequately filtered before entering the instrument. End-of-sample-line filters must be used with the unit. These filters must be installed at the end of all sample lines.

5. Ensure the end of the sampling line is unobstructed to allow the sample to flow freely to the instrument.

6. Keep sample lines as short as possible to reduce transport time.

⚠ CAUTION

Ensure that tubing radii are wide enough to prevent kinking or bending. Otherwise, an obstruction may occur, preventing the instrument from sampling the intended area.

7. DO NOT:
   - back-pressure the exhaust line or
   - connect it to a vacuum source or
   - install a flow meter in the exhaust line.

   ALWAYS :

   connect an exhaust line that is vented to a safe area or an outside atmosphere.

Diffusion Units

Diffusion units sample the refrigerant gas located at the base of the refrigerant monitor. The visual indication for the unit is located on the front of the unit. Other outputs are on the device can be used to provide gas concentration, alarm status, and instrument status indications.

Consider the following guidelines when selecting the location for the sampling point(s):

1. Most refrigerants are heavier than air and sink to the floor or accumulate in low areas.
2. Place the instrument in an area that provides it with a representative sample; ventilation Smoke Tubes (P/N 458480) are useful in determining air flow patterns in ambient sampling areas.
3. Ensure that the area around the instrument is unobstructed to allow the sample to flow freely to the instrument.
4. If the unit's visual indication is used to alert workers of potential gas hazards, mount the instrument in a clearly visible location.

NOTE: The diffusion unit is appropriate for applications where the indication panel is clearly visible with the unit mounted 12-18 inches off the floor; otherwise, a pumped unit located at eye level with sensor points located 12-18 inches off the floor may be more appropriate.

Equipment Configuration

The equipment arrangement in the room can also have an impact on the most effective place to sample. As a general guideline:

- If there is one chiller in the room, sample at the perimeter of the unit.
- For two chillers, sample between them.
- With three or more chillers, multiple monitors or a single monitor with a multi-point sampling system should be used. Airflow patterns must always be considered.

Activity in the Room

The expected activities in the room must also be considered when determining the sensing point. Refrigerants will concentrate near the floor. Typically, sampling 12-18 inches above the floor is sufficient for early warning and to provide adequate protection for someone working close to the floor. If it is expected that an occupant's breathing zone may be less than 12-18inches off the floor, locate the sampling point accordingly.

NOTE: Select sampling locations which result in the shortest possible line length in order to reduce transport time.

Consider the following guidelines when selecting the location for the sampling point(s).

1. Most refrigerants are heavier than air and sink to the floor or accumulate in low areas.
2. Place the end of the sampling line in an area that provides the instrument with a representative sample; ventilation Smoke Tubes (P/N 458480) are useful in determining air flow patterns in ambient sampling areas.
3. Properly exhaust the instrument to a safe area or to outside atmosphere.
4. Ensure the sampling area is free of particulate matter and condensing moisture; ensure sample lines will not draw moisture up into the line.

   NOTE: The sample gas must be adequately filtered before entering the instrument. End-of-sample-line filters must be used with the unit. These filters must be installed at the end of all sample lines.

5. Ensure the end of the sampling line is unobstructed to allow the sample to flow freely to the instrument.
6. Keep sample lines as short as possible to reduce transport time.

⚠ CAUTION

Ensure that tubing radii are wide enough to prevent kinking or bending. Otherwise, an obstruction may occur, preventing the instrument from sampling the intended area.

7. DO NOT:
   - back-pressure the exhaust line or
   - connect it to a vacuum source or
   - install a flow meter in the exhaust line.

   ALWAYS:

   connect an exhaust line that is vented to a safe area or an outside atmosphere.

Unpacking the System

To unpack the Chillgard LE Refrigerant Monitor:

- Carefully remove the unit from its shipping container(s) to prevent damage to sensitive electrical and gas sensing components.
- Search through packing material and inside of the containers to prevent inadvertently discarding usable or valuable parts.
- Remove the plastic screws holding the cover to the enclosure.
- Open the front cover from the Chillgard LE Refrigerant Monitor to expose the electrical printed circuit board.

Initial Inspection

With the front cover open, carefully inspect the components and assemblies inside the enclosure. If damage or shortage is noted, promptly make the proper claim with the carrier.

Mounting the Unit

Five Rules for Proper Mounting

1. Do not mount the unit to structures subject to vibration and shock.
2. Do not locate the unit near an excessive heat source.
3. For proper cooling, allow at least three inches of clearance around all surfaces, except for the mounting surface.
4. Do not mount the unit where it will be exposed to direct solar heating, rain and splashing water.
5. Mount the unit where it is accessible for maintenance.

Mounting

⚠ WARNING

Explosion Hazard

Unit must not be located in areas that may contain a flammable mixture of gas and air. Failure to follow this requirement can result in death, serious injury or equipment or property damage.

⚠ WARNING

Install the Chillgard LE Refrigerant Infrared Monitor where a refrigerant is anticipated or control of the gas is desired.

Do not mount more than one pumped unit to the same mounting structure. Mechanical vibration produced from one unit can cause improper gas readings on another unit.

Ventilation Smoke Tubes (P/N 458480) are useful in determining air flow patterns in ambient sampling areas.

1. Open the unit by removing the plastic screws securing the lid to the enclosure.
2. Using #10 mounting screws or bolts, securely mount the Chillgard LE Refrigerant Monitor to a wall or flat mounting surface via the four holes that run through the enclosure base.
3. Reinstall the cover to the unit.

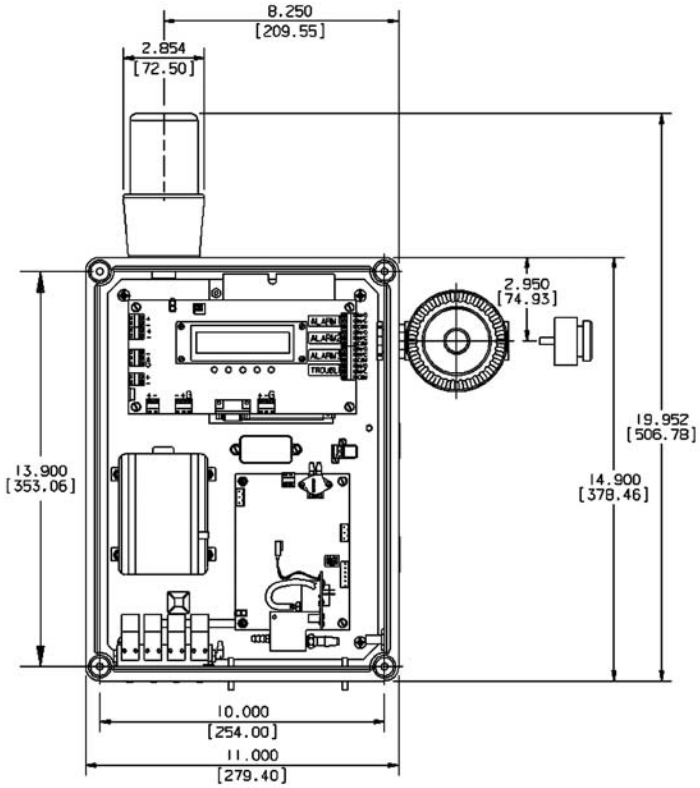

Figure 2-2. LE Mounting Dimensions

Wiring Connections

Opening the Unit

See Appendix A, "Installation Outline Drawings" for wire entry hole locations.

⚠ CAUTION

Component Damage!

Monitor components must be protected from splashing, spraying, or dripping water. Failure to do so may cause damage to internal components.

Wiring

The Chillgard LE Refrigerant Monitor is factory-wired with either a universal power supply for 110/220 VAC operation or no power supply for 24 V AC/DC operation. Refer to FIGURE 1-1 to determine power requirement for the unit.

The following steps outline the procedure for connecting the wiring:

1. Determine the power supply for your Chillgard LE Refrigerant Monitor (FIGURE 1-1).

CAUTION

Instrument Damage !

Correct power voltage must be connected to the instrument. Failure to use correct voltage may result in instrument damage.

All power wiring is connected to the terminal block (FIGURE 2-3).

NOTE: External overcurrent shall be included in the building installation, shall be in close proximity to the equipment and within easy reach of the operator and shall be marked as the disconnecting device for the equipment.

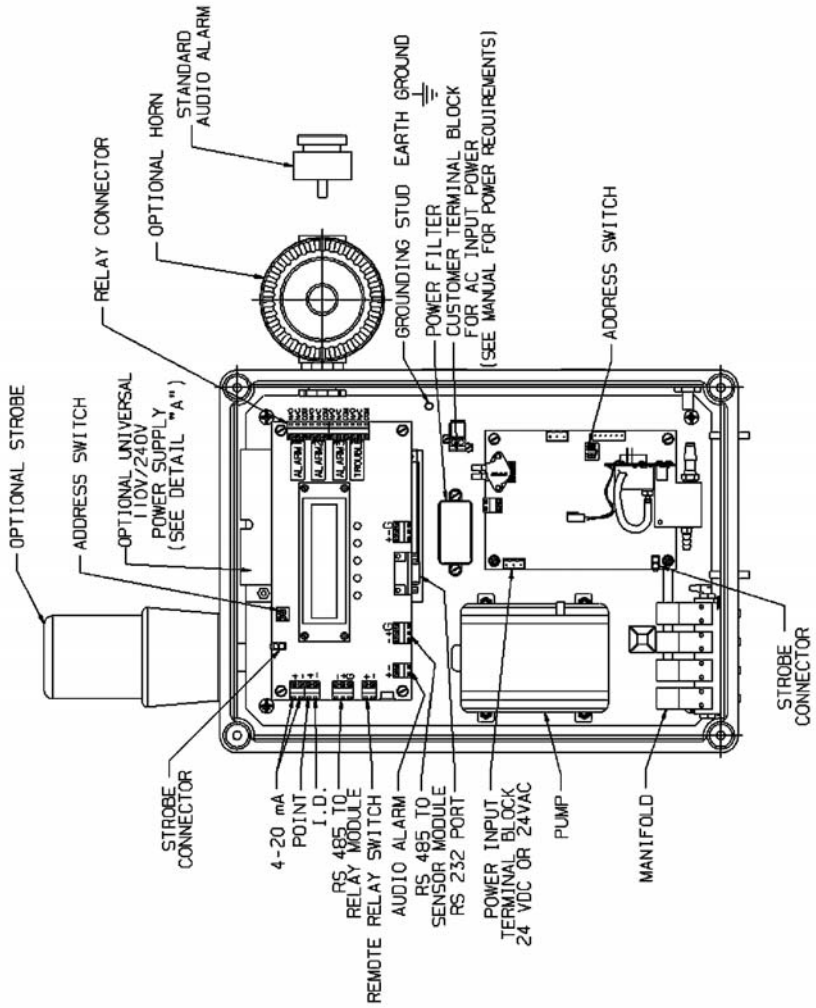

Figure 2-3. LE Electrical Connections

For 24 V DC or AC Wiring

NOTE: Separate power wiring from output signal wiring. The 24-volt power source used with this equipment must be separated from mains by double or reinforced insulation.

All power wiring is connected to the terminal block for 24 V DC/AC input shown in FIGURE 2-3.

For 110/220 VAC Wiring

All power wiring is connected to the two-position terminal block shown in FIGURES 2-3.

2. Connect the "HOT" AC wire to the terminal with the black wire (or brown wire for instruments with a line filter).
3. Connect the "NEUTRAL" AC wire to the terminal with the white wire (or blue wire for instruments with a line filter).
4. Connect a ground wire on the ground stud (FIGURE 2-3). Supply earthgound is installed on lug first and all component earthgrounds are connected afterwards.
5. Route the power wiring and the ground wire through electrical entry holes in the case bottom.

   NOTE: Separate power wiring from output signal wiring. The 24-volt power source used with this equipment must be separated from mains by double or reinforced insulation.

Analog Signal Output Wiring

The Chillgard LE Refrigerant Monitor is factory-configured with an analog output. The analog output for your Chillgard LE Refrigerant Monitor (FIGURE 1-1) is 4-20 mA, current sourcing type (standard) (4 mA = 0 ppm gas, 20 mA = 1000 ppm gas).

The output connections are located on the control board. Terminals (+) and (-) are available for the signal output and ground (FIGURE 2-3).

Relay Outputs

Alarm Relays

There are three alarm relay outputs (see FIGURE 2-3):

- Caution (factory-set to trip at 50 ppm)
- Warning (factory-set to trip at 150 ppm)
- Alarm (factory-set to trip at 300 ppm for R123, 1000 ppm for other gases).

Each relay can be set up as latching/non-latching and/or normally-energized/normally de-energized. Contacts are Form C at 240 Volts AC 5 amps resistive. User can adjust alarm trip points via the front panel.

Alarm Relay Connections Wiring

Three refrigerant level alarm relay outputs are provided. All alarm relays are Form C, SPDT relays which can be wired to either closed or opened contacts in an alarm condition.

Each relay has contacts for:

- NORMALLY OPEN (NO)
- COMMON (COM)
- NORMALLY CLOSED (NC).

The function of each relay connector terminal is indicated on FIGURE 2-3.

Relay wiring should enter the unit through one of the openings on the right side of the unit. Connections are made at the internal terminal strip labeled J29, located to the right of the relays.

NOTE: The maximum wire size that these connectors can accept is #12 AWG.

Trouble Relay

There is one relay (the Trouble relay) within the unit that indicates that a trouble or start-up condition exists. This relay is configured from the factory and operates differently than the alarm relays. It operates in a normally-energized mode.

This relay is energized when the instrument is:

- normally operating,
- in the calibration mode, or
- in the setup condition.

The relay is de-energized when:

- a fault is detected,
- the unit is in the start-up state, or
- the main power is lost.

This means that power is no longer provided to the relay coil. It is not possible to change the configuration of the Trouble relay.

The relay connector function or identification:

- NORMALLY OPEN (NO),
- COMMON (COM),
- NORMALLY CLOSED (NC)

as marked in FIGURE 2-3 refers to the relay contacts as if the relay is de-energized or in the trouble condition. A relay contact is provided between the Normally Closed (NC) and Common (COM) position. This contact will be made in the event that main power to the unit is lost or any other trouble condition exists.

Trouble Relay Connection Wiring

The Trouble relay wiring should enter the unit through one of the entries on the right side of the unit. Connections are made at the internal terminal strip located next to the Trouble relay The maximum wire size that these connectors can accept is #12 AWG.

Chapter 3
Start-up and Initial Adjustments

Operation

This section describes the following procedures for Chillgard LE Refrigerant Monitor operation:

- Startup procedures
- Placing the system into operation
- Initial instrument calibration.

Start-Up

The following steps outline the procedures to power ON the Chillgard LE Refrigerant Monitor:

1. Before applying power to the unit, verify proper power will be applied to the unit.
2. Turn the instrument ON at the circuit breaker or fuse that supplies power to the instrument. (The instrument does not have a power switch.)

   NOTE: A green LED indicates that power is ON. The display will begin to indicate the gas concentration of each point connected to the Chillgard LE Monitor.

After power ON, allow for unit stabilization (about two hours) before checking calibration of instrument.

General Calibration (All Models)

Introduction

The calibration procedure should be performed regularly and a log kept of calibration adjustments. Increase the calibration frequency when any calibration differs as much as 10% from the test concentration. More frequent calibrations may be required when the Chillgard LE Refrigerant Monitor is new. Calibration frequency depends on the operating time and chemical exposures of the instrument.

Also perform the calibration procedure when installing or changing the power source of the control instrumentation.

If this calibration procedure cannot be performed at any step:

- See Section 5, "Troubleshooting Guidelines"
- Localize the problem
- Replace the inoperative component.

Calibrate newly installed instruments on a frequency until calibration records prove instrument stability. Calibration frequency is then reduced in accordance with a schedule established by the safety officer or facility manager.

Display Screens

All instrument operation is performed via the front panel which consists of four keys and a two-line by 20-character LCD display. There is no reason to open the unit for set-up, calibration or diagnostic testing of the instrument. The most commonly used, self-explanatory screens appear on the following pages. Simply follow the on-screen menus. The step-by step approach guides you through each operation.

- The Display Screen Flow Overview (FIGURE 3-1) shows a general system function flow. See the following FIGURES for specific Display Screen details:
    - Start-up and Normal Operation Screens (FIGURE 3-2)
    - Calibration Screens (FIGURES 3-4 through 3-6)
    - Information Screens (FIGURES 3-7 through 3-8 and FIGURES3-19 and 3-20)
    - Set-up Screens (FIGURES 3-3 and 3-9 through 3-18).

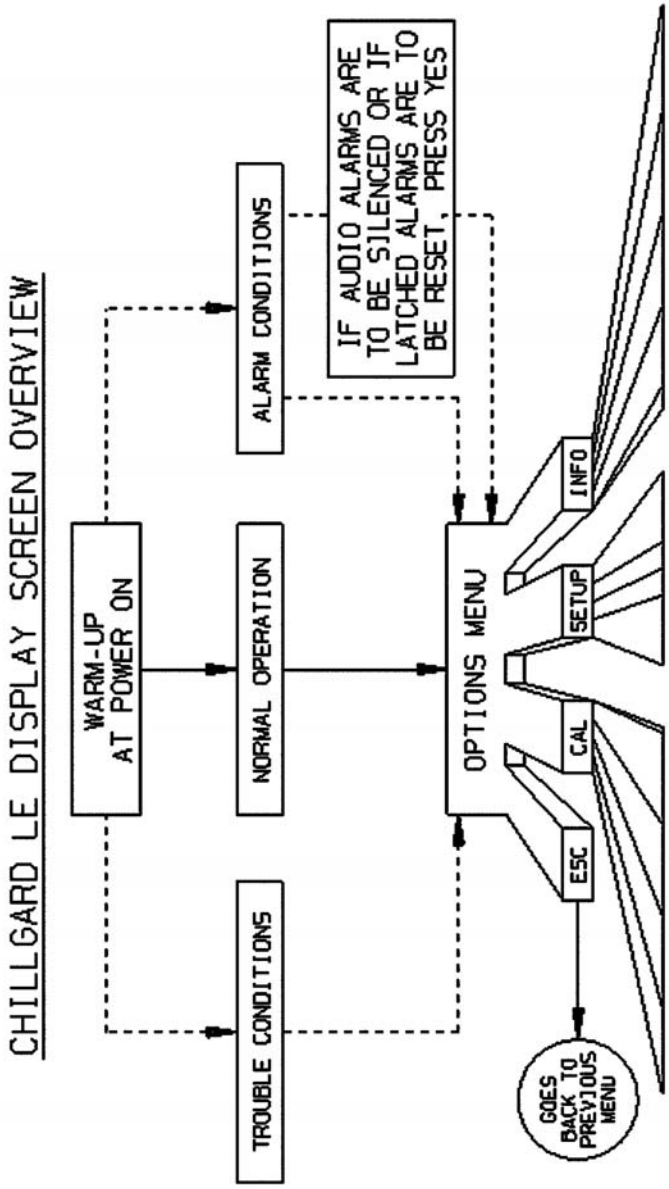

Figure 3-1a. Display Screen Overview

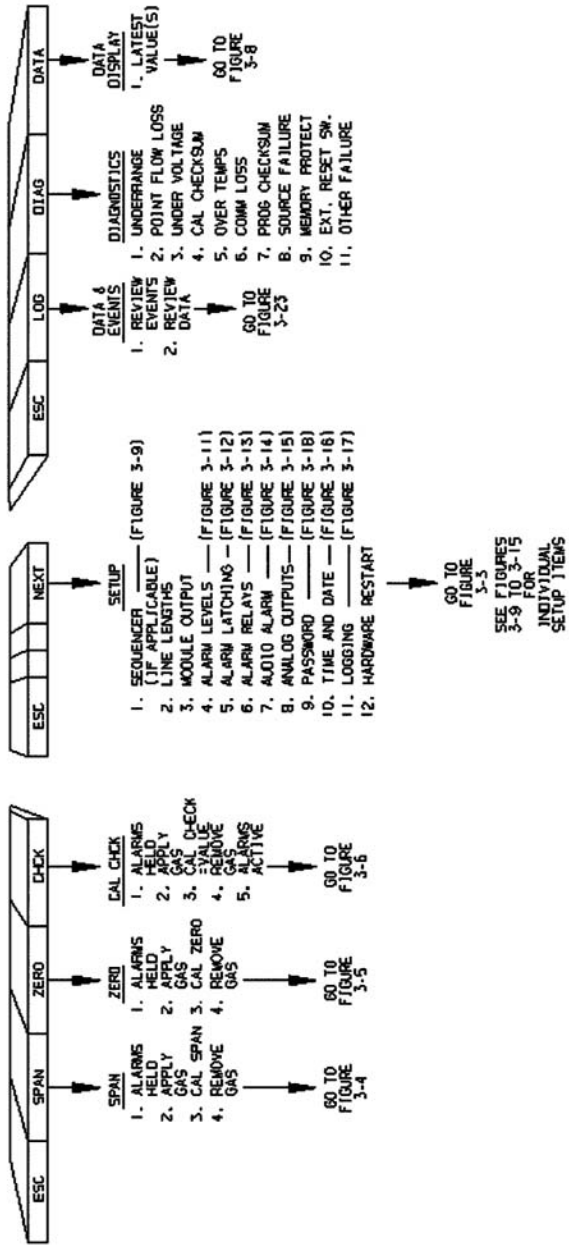

Figure 3-1b. Display Screen Overview Continued

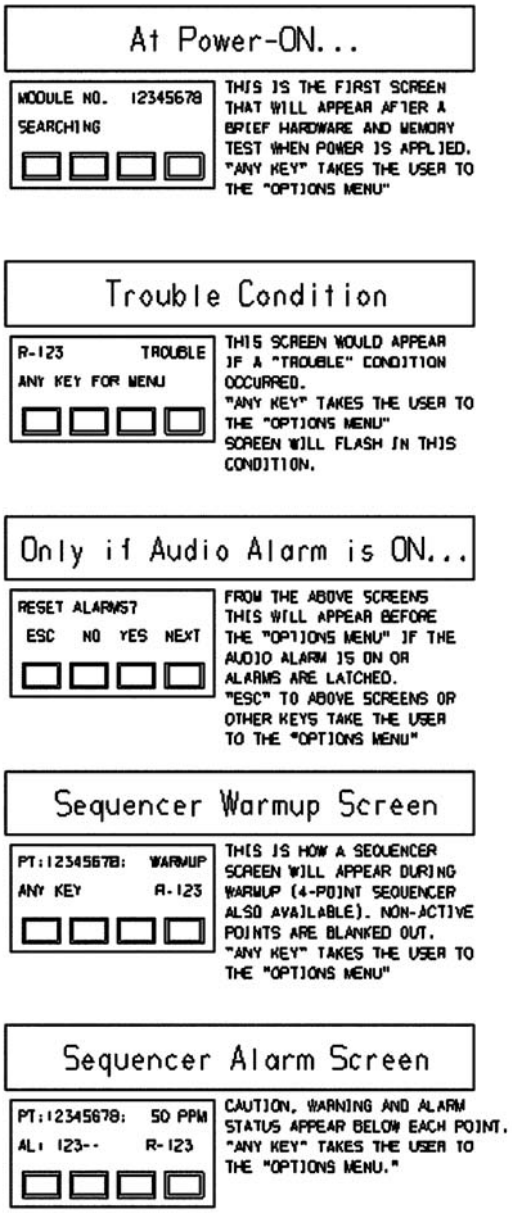

Figure 3-2a. Start-up and Normal Operation Screens

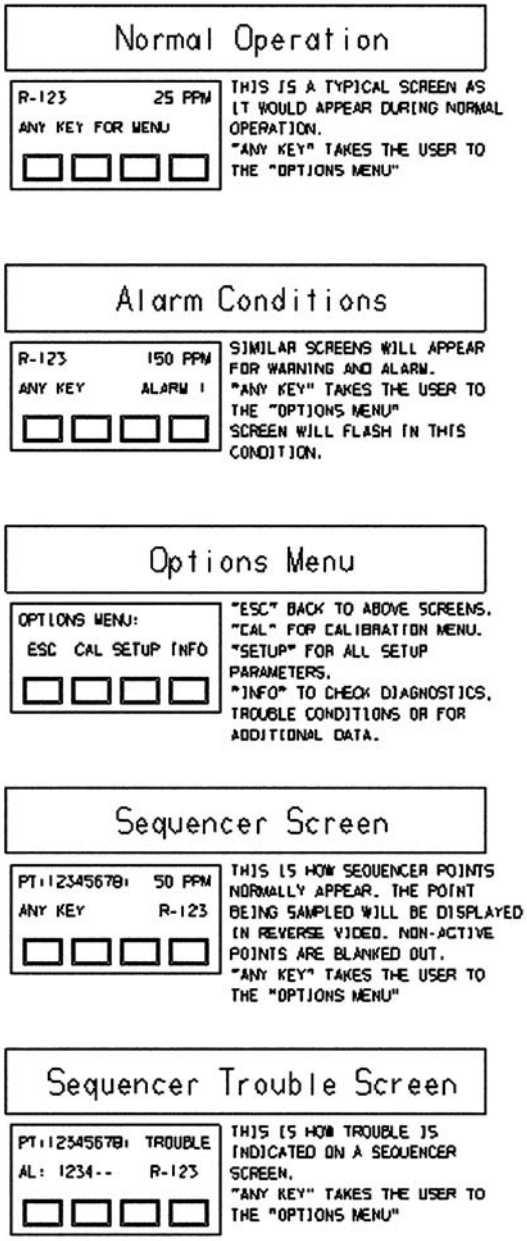

Figure 3-2b. Start-up and Normal Operation Screens Continued

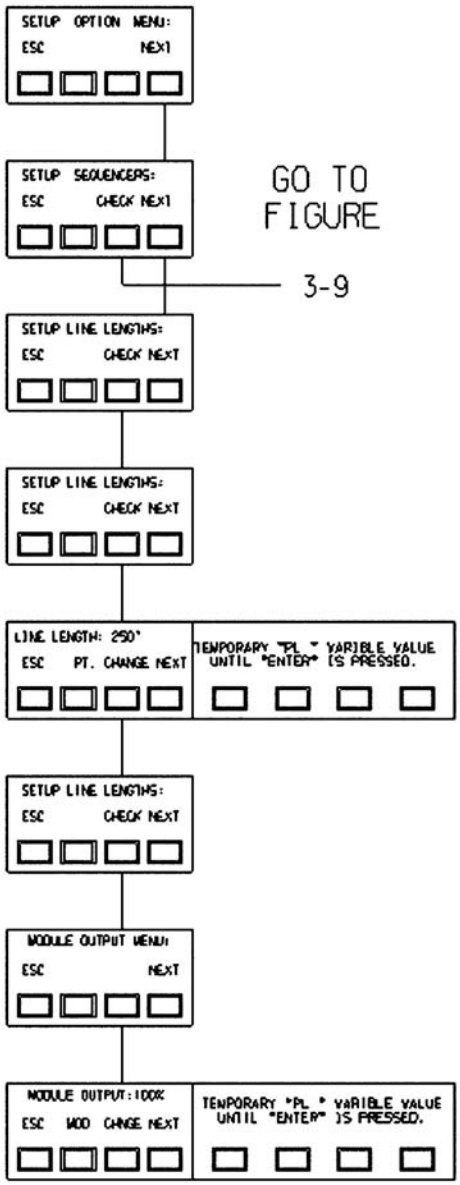

Figure 3-3a. Setup Screens

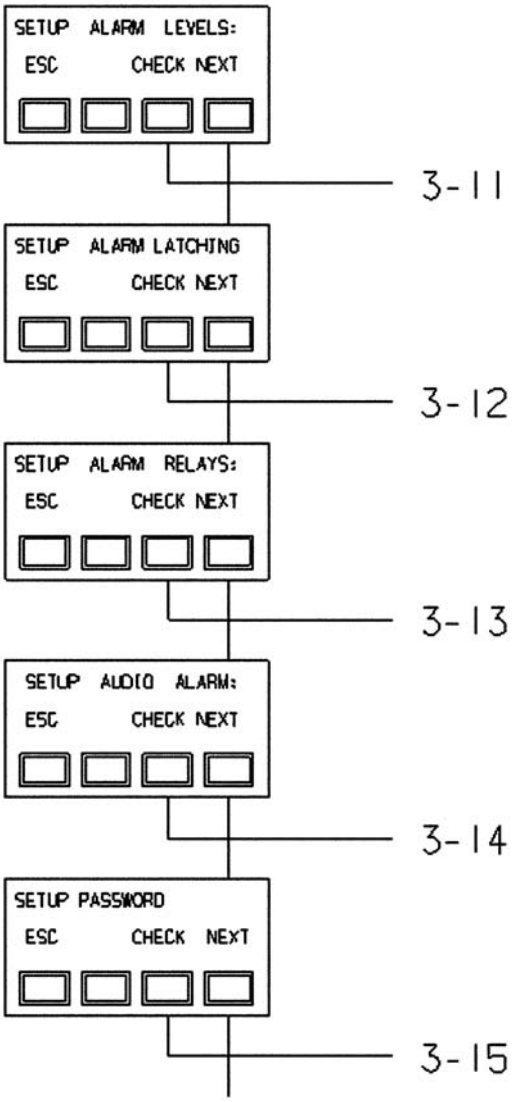

Figure 3-3b. Setup Screens Continued

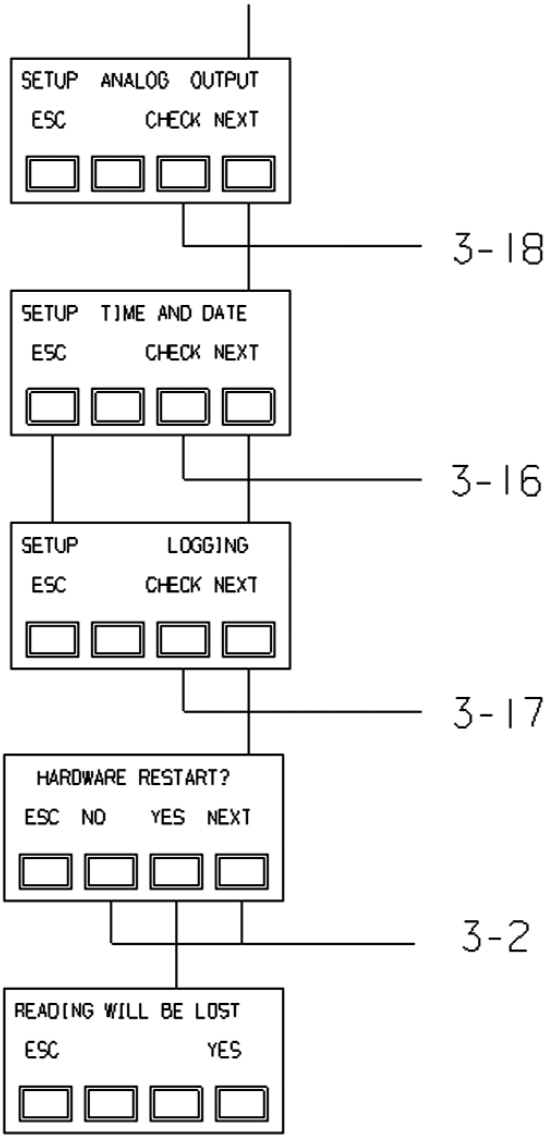

Figure 3-3c. Setup Screens Continued

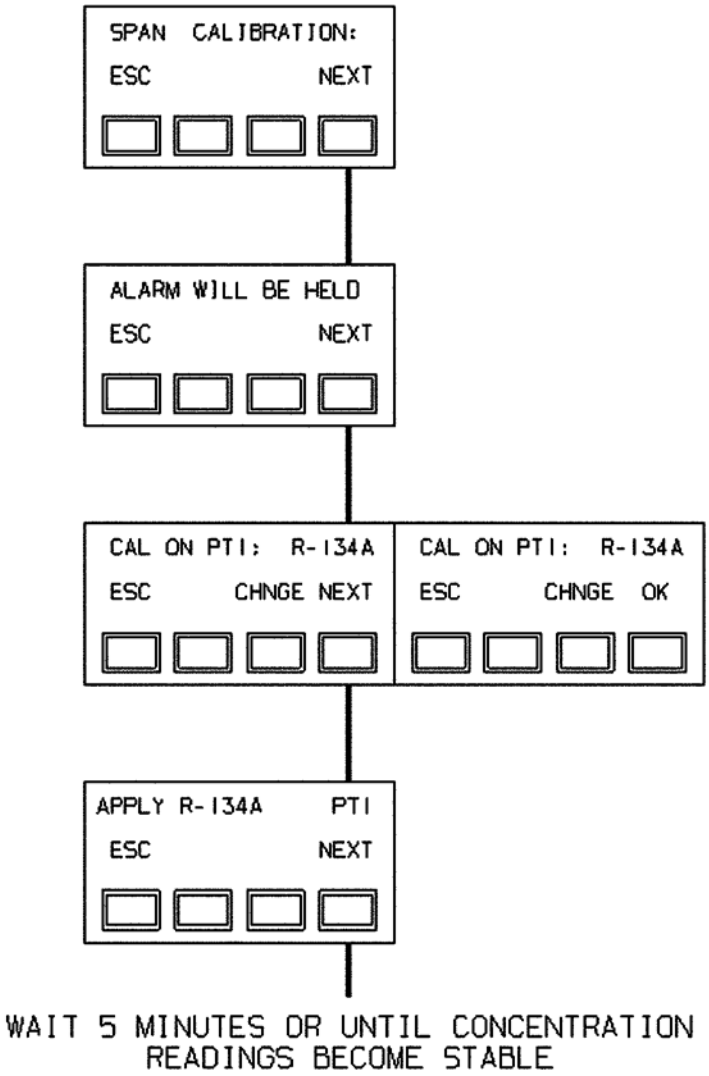

Figure 3-4a. Span Calibration

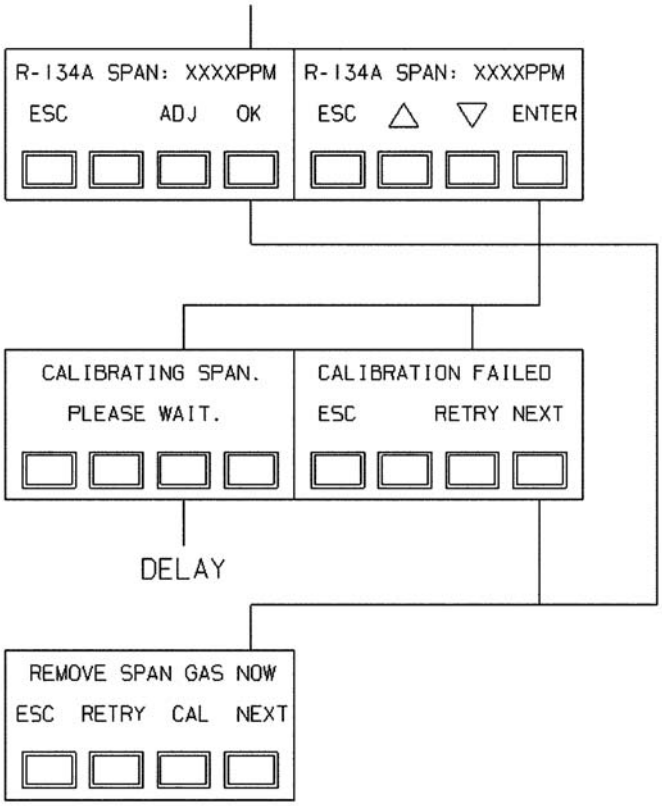

Figure 3-4b. Span Calibration Continued

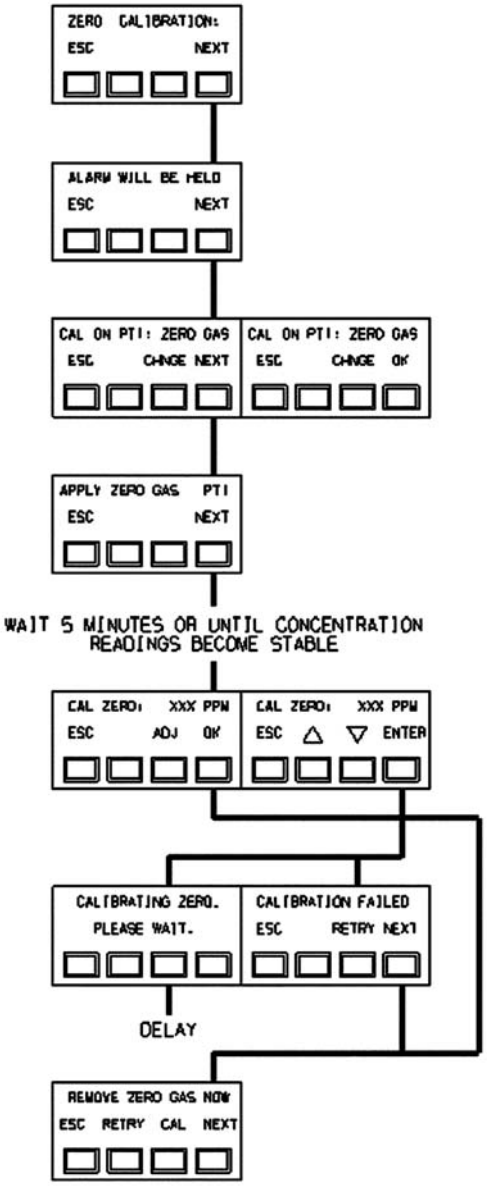

Figure 3-5. Zero Calibration

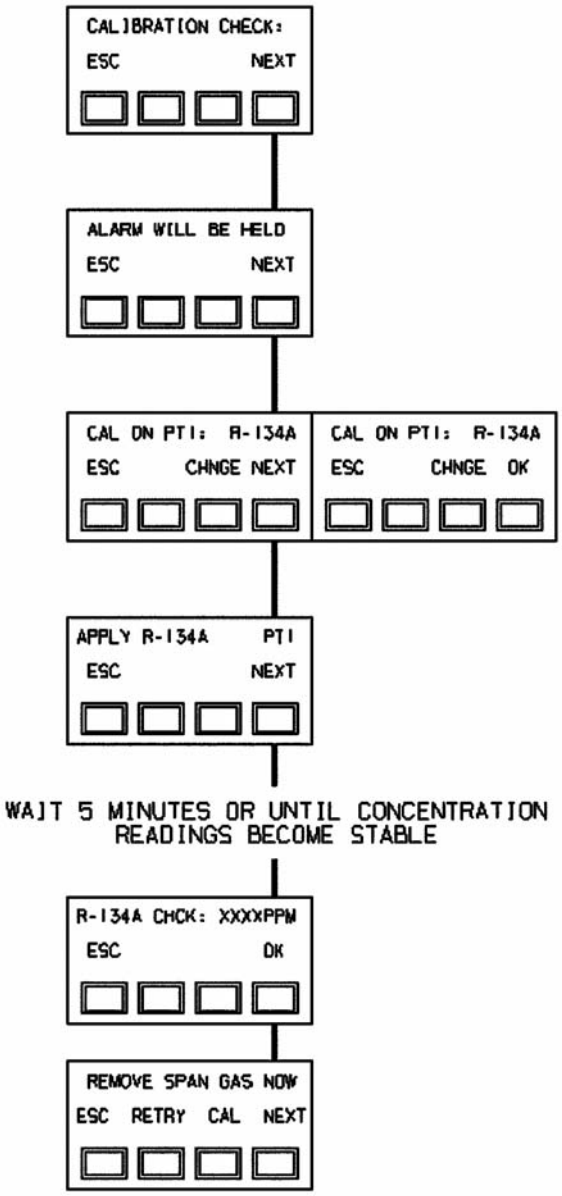

Figure 3-6. Check Calibration

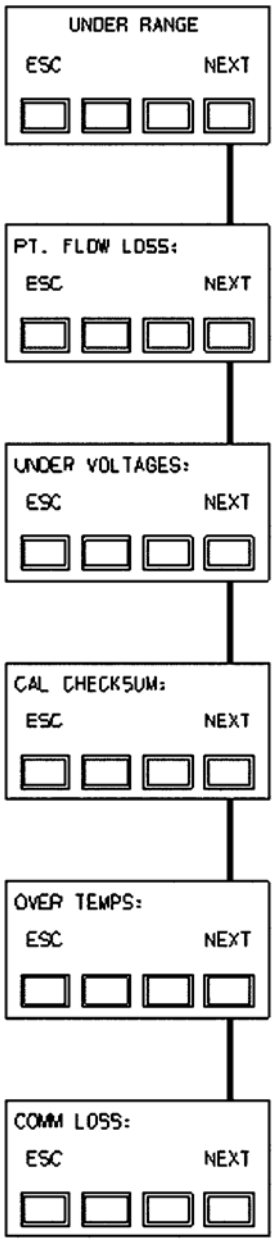

Figure 3-7a. Diagnostic Screens

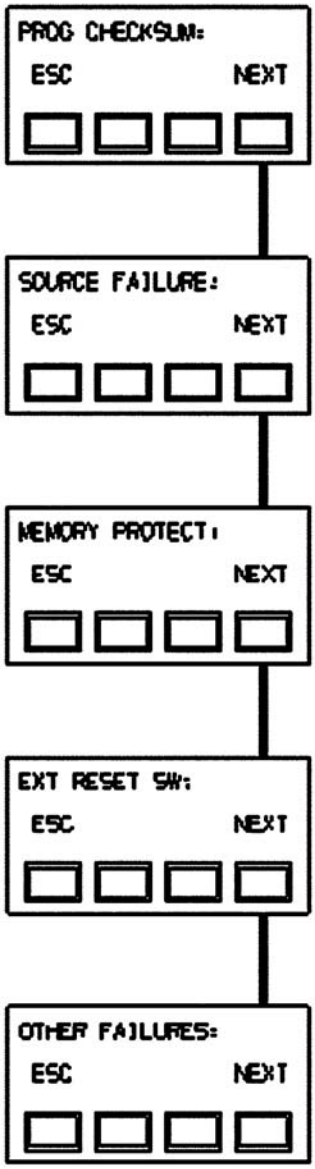

Figure 3-7b. Diagnostic Screens Continued

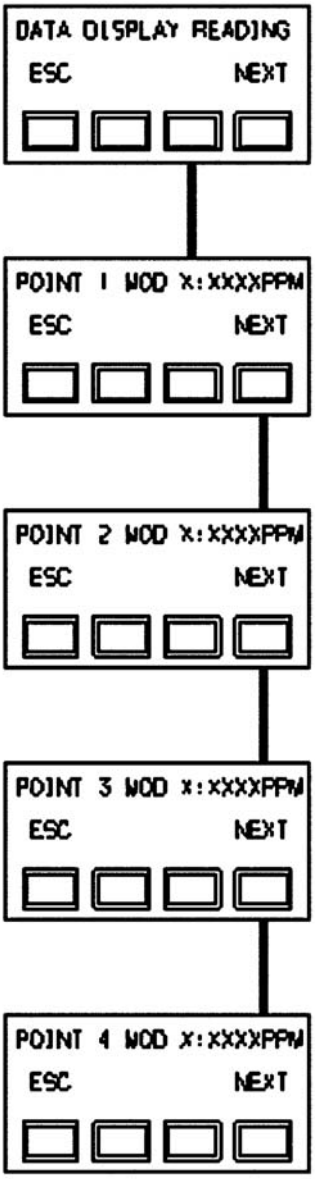

Figure 3-8a. Data Screens

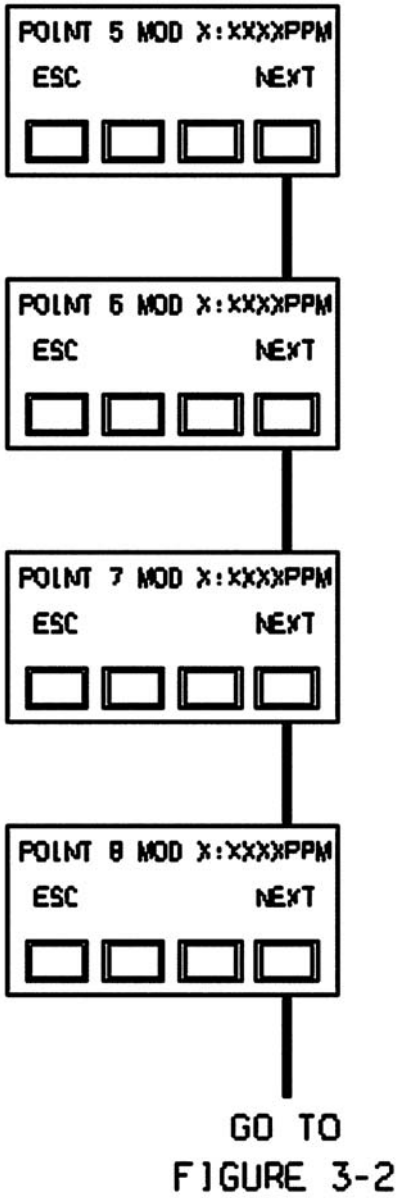

Figure 3-8b. Data Screens Continued

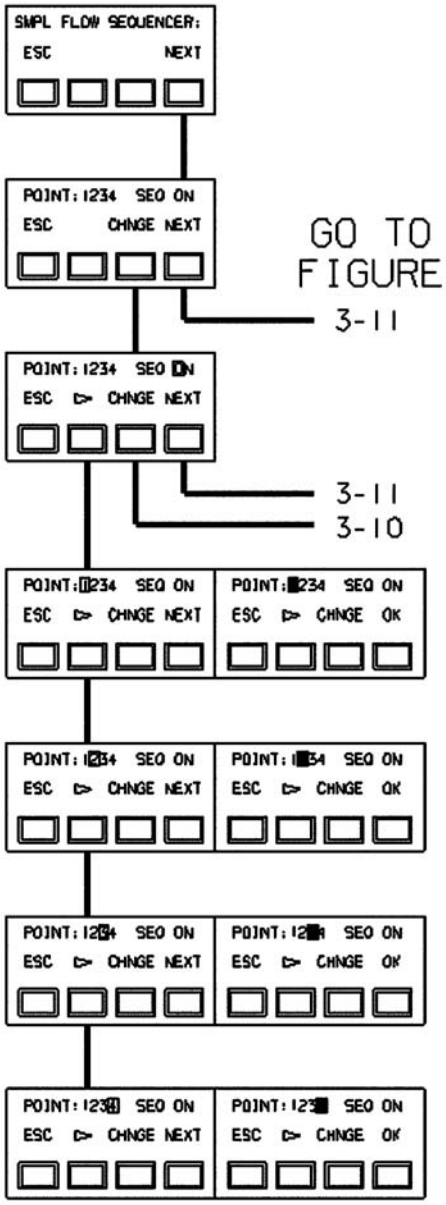

Figure 3-9. Sequencer Set-up Screens

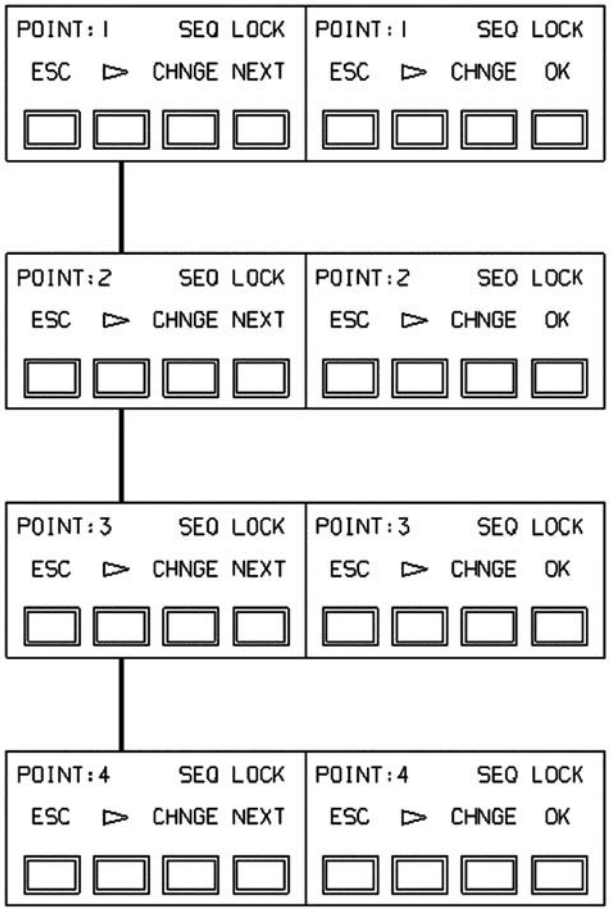

Figure 3-10. Sequencer Setup Screen

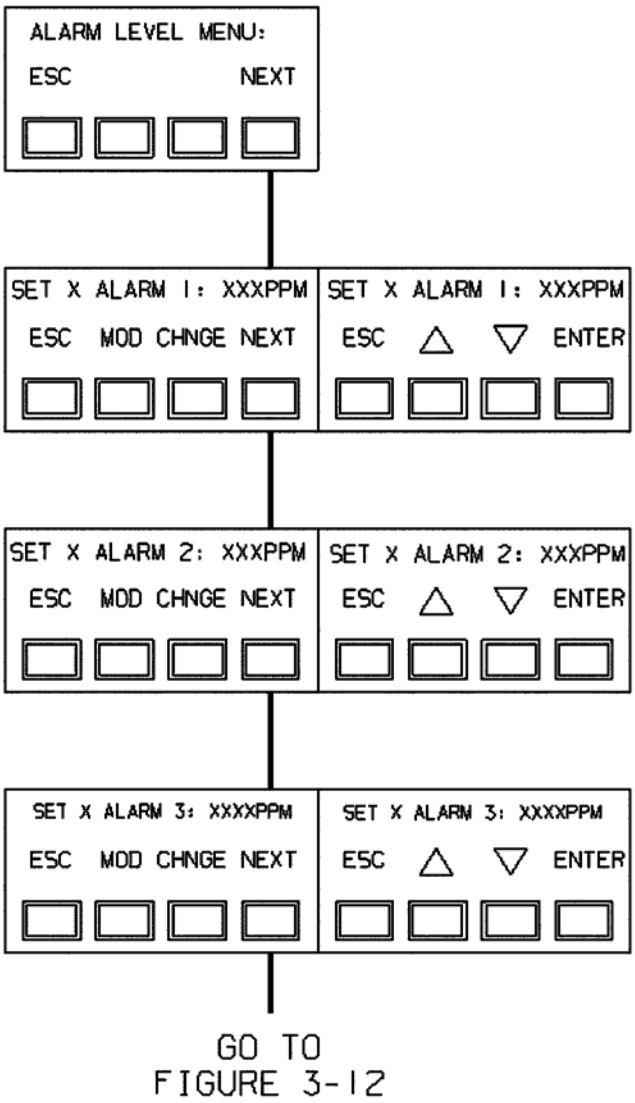

Figure 3-11. Alarm Level Screen

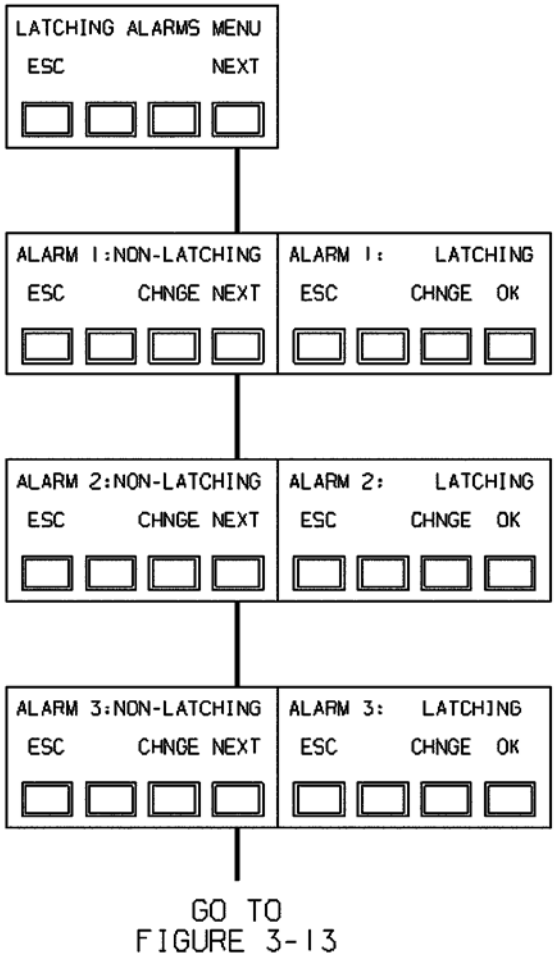

Figure 3-12. Alarm Latching Screen

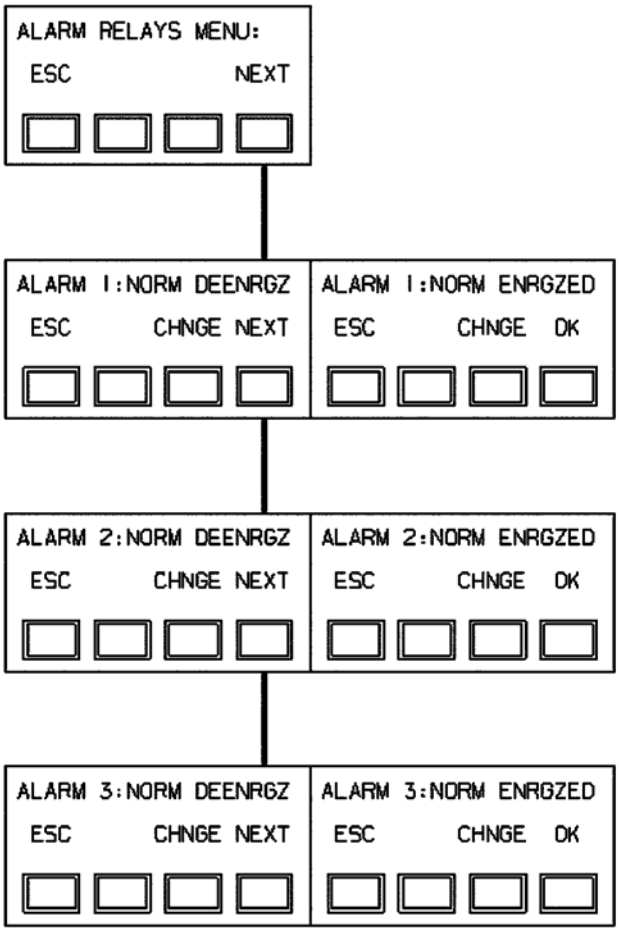

Figure 3-13. Alarm Latching Screen

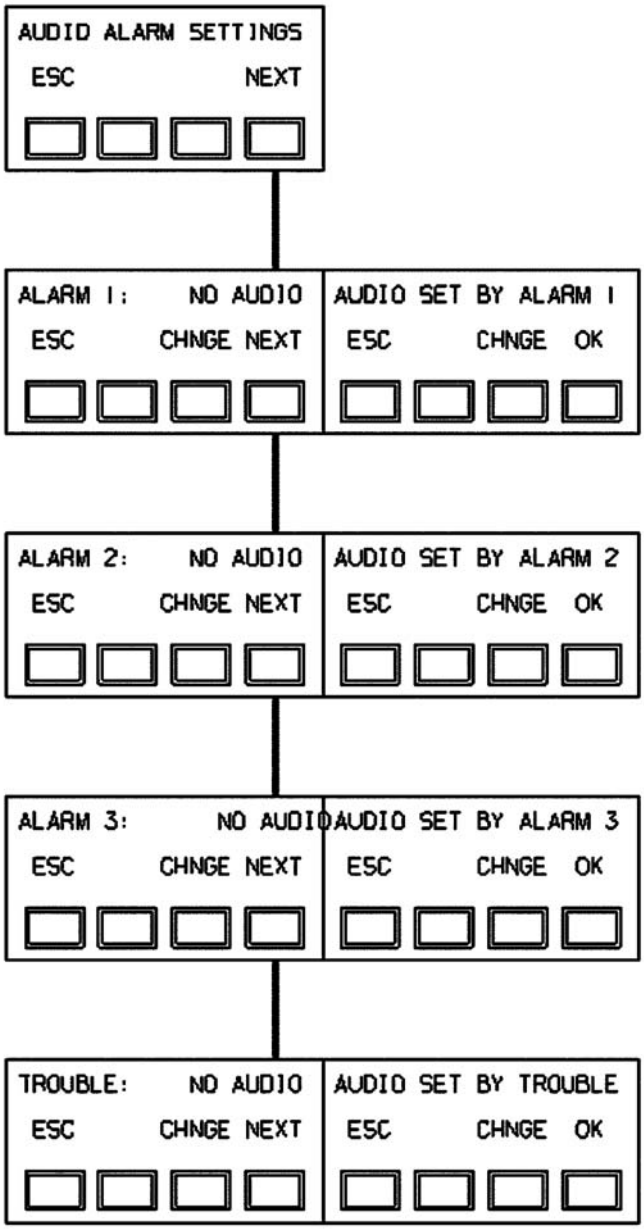

Figure 3-14. Audio Alarm Screen

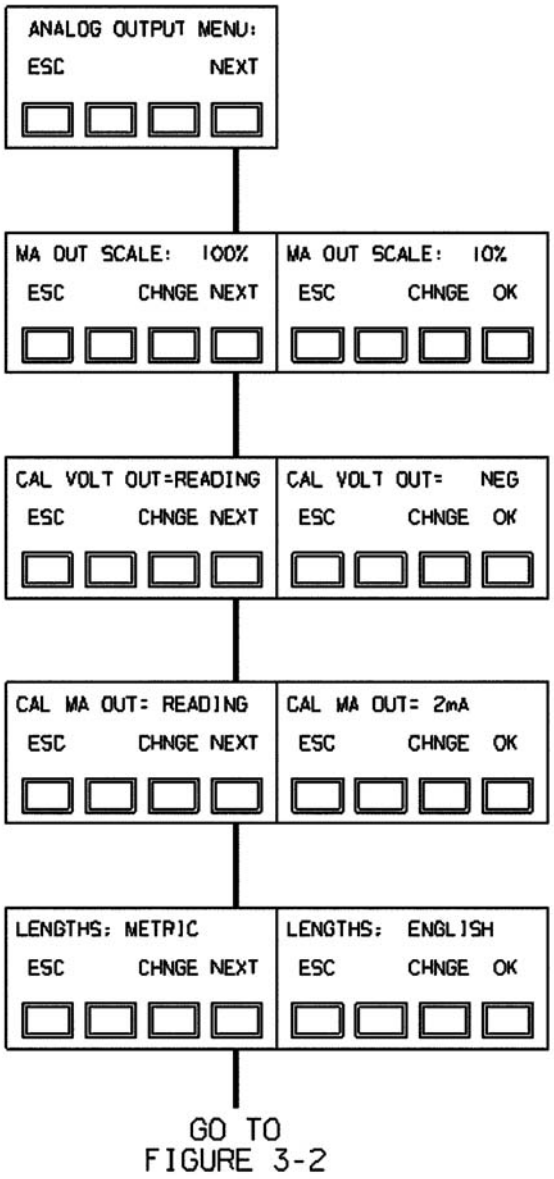

Figure 3-15. Analog Output Screen

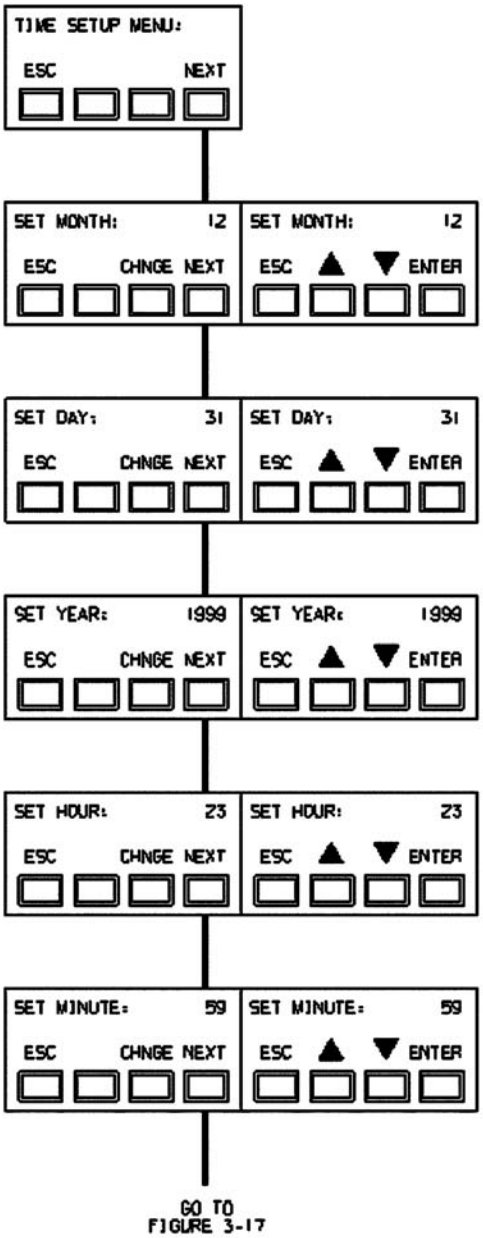

Figure 3-16. Setup Time

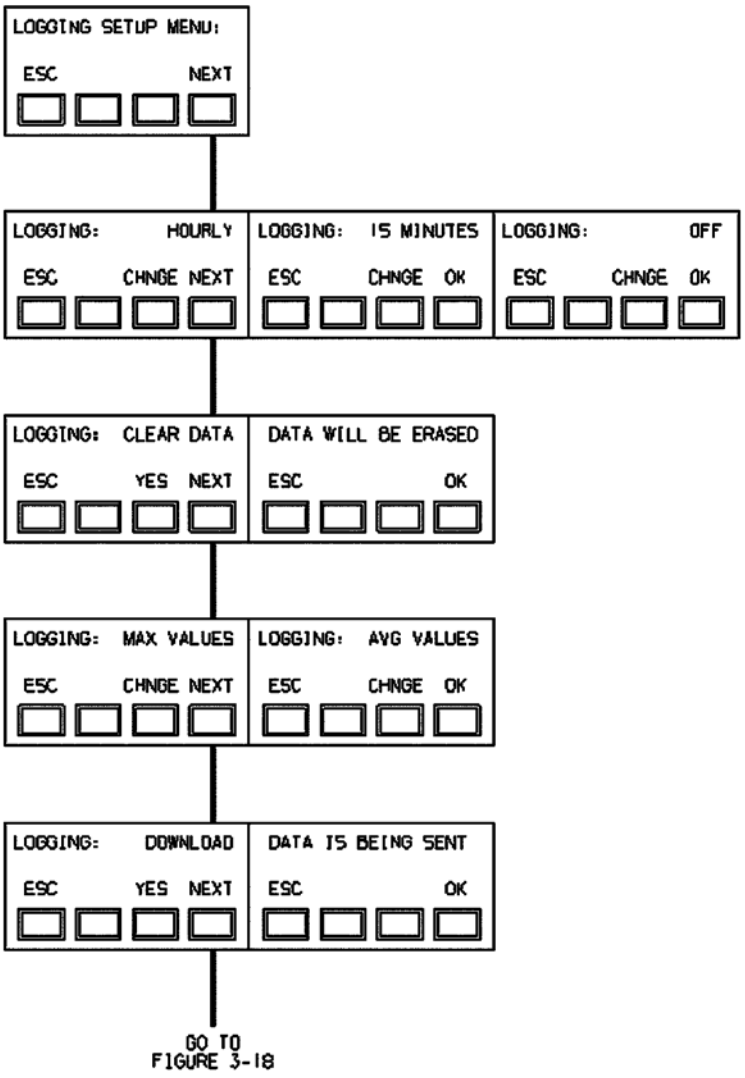

Figure 3-17. Setup Log

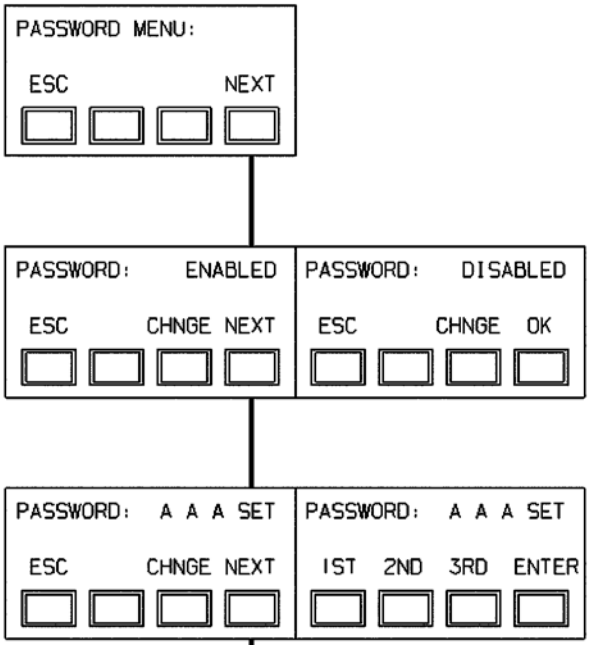

Figure 3-18. Setup Password

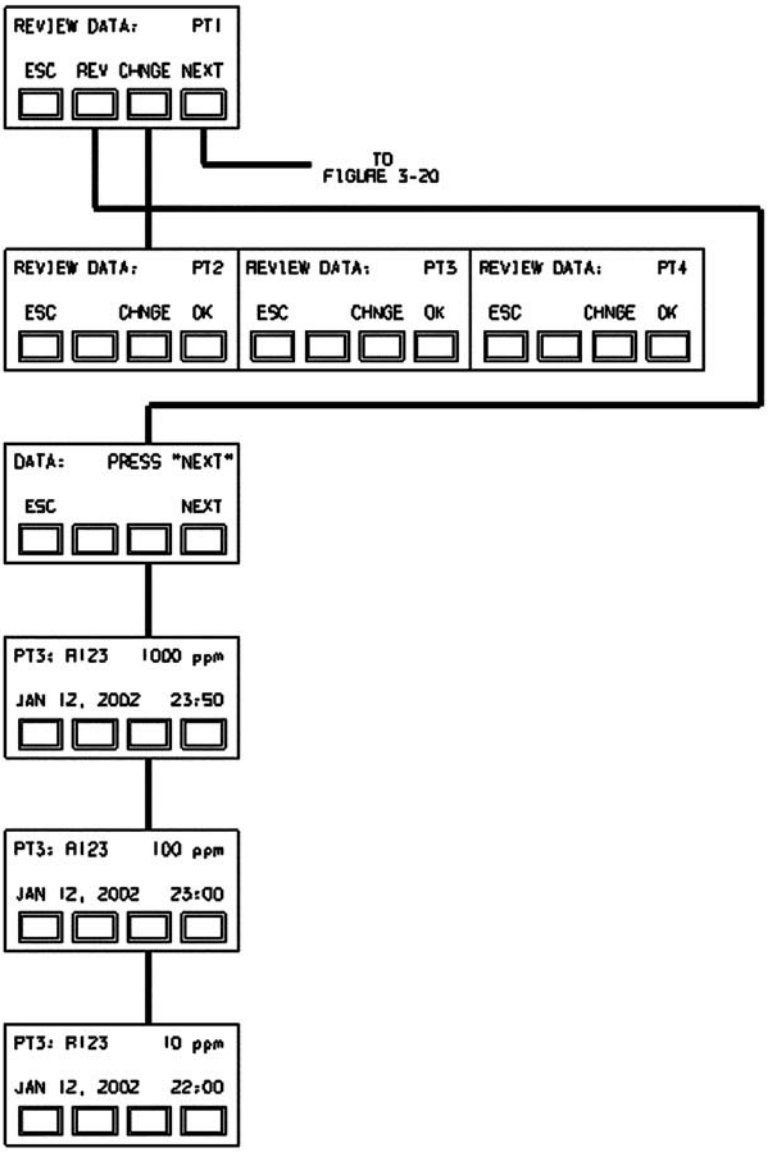

Figure 3-19. Review Data

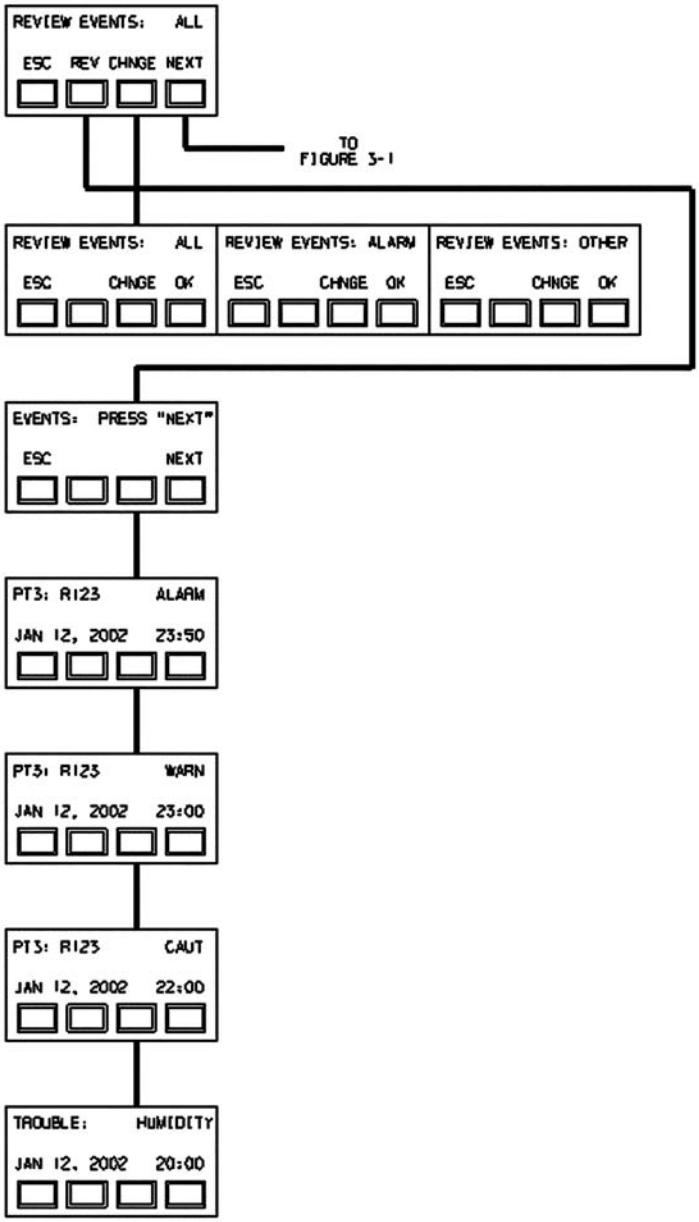

Figure 3-20. Review Log

Chapter 4
Calibration

Diffusion Version Calibration

Calibration Equipment - (FIGURE 4-1)

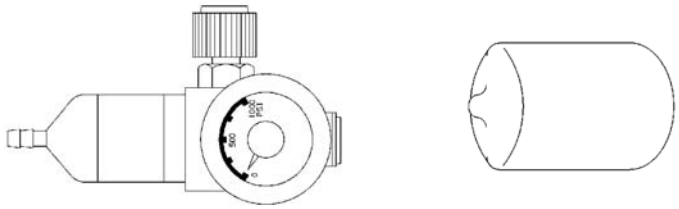

0.25 LPM Flow Controller P/N 478359 *Calibration Adapter P/N 10034395*

Figure 4-1. Calibration Equipment

Calibration of the monitor requires a supply of:

- **ZERO GAS** (air or nitrogen) It may be possible to use ambient air if you are sure it does not contain any possible interferant gases or contaminants.
- **SPAN GAS** (A known refrigerant concentration) that measures approximately 10% of the full-scale calibration of the unit. See TABLE 5-3 for available refrigerant gas cylinders.

Relative humidity may have a small effect on the output of the unit. If dry gas is used, Nafion Tubing (P/N 813628) can be used to humidify the sample stream going to the monitor.

Both ZERO gas and SPAN gas must be carefully applied to the unit to avoid pressurizing the internally mounted optical bench.
See TABLE 5-3, Calibration Accessories Parts List for the appropriate calibration parts and calibration gases available for the Chillgard LE Refrigerant Monitor.

⚠ WARNING

Exercise care during the span calibration to ensure that the unit can accurately detect refrigerant gas. Improper calibration can cause improper readings across the full-scale range of the monitor.

Initial Calibration Procedures

During the initial calibration procedures, alarm relays of any connected control instrumentation may activate. Disconnect or disable any equipment or alarms.

The following equipment is required for initial calibration:

- Tubing Assembly with calibration adapter (FIGURE 4-1)
- Calibration Gas
- Flow Controller (0.25 LPM) (FIGURE 4-1)

Preparation for Calibration

To verify the instrument is operating properly and to make initial calibration adjustments, perform the following:

1. Remove the light gray cover to open the enclosure.

   ⚠ CAUTION

   Component Damage!
   Monitor components must be protected from splashing, spraying, or dripping water. Failure to do so may cause damage to internal components.

2. Deactivate the equipment connected to the outputs, or disconnect the wiring to the outputs.

   ⚠ CAUTION

   If any control instruments connected to the Chillgard LE Refrigerant Monitor are wired to external devices (e.g., horns, exhaust fans, and fire suppression systems), these devices may activate while adjustments or repairs are performed during the following procedures.

   To prevent activating these devices while adjusting the Chillgard LE Refrigerant Monitor, disconnect the wiring from the relay. Return all wiring to the relay when the calibration procedure is completed.

Initial Calibration

Refer to FIGURES 3-4 and 3-5 for calibration menus.

1. Using the tubing and calibration adapter, place zero gas on the unit for a minimum of five minutes as shown in FIGURE 4-2.

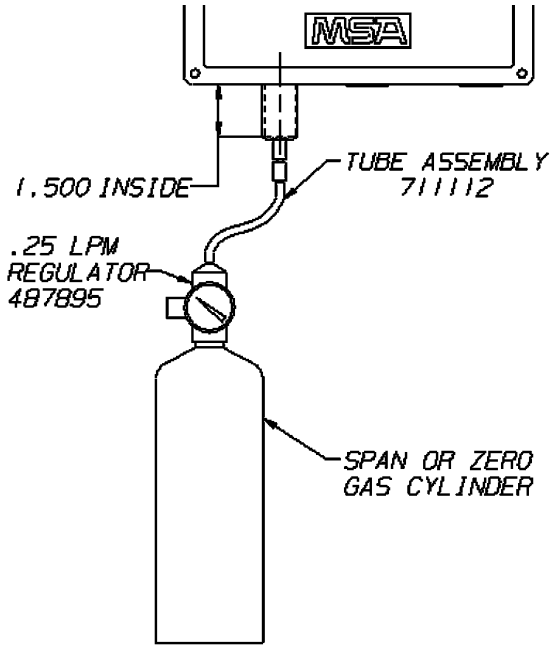

Figure 4-2.
Applying Calibration Gas
to the Chillgard LE Refrigerant Monitor

2. If necessary, rezero the unit as shown in the software menu (FIGURE 3-5).
3. Close the regulator valve and remove the zero gas cylinder from the sample tubing.
4. Apply span gas to the unit for a minimum of five minutes.
5. If necessary, span the unit as shown in the software menu (FIGURE 3-4).
6. Close the regulator valve and remove the span gas cylinder from the sampling tubing.
7. Remove the calibration cap and the calibration box from the unit to return to normal operation.
8. Replace lid on the enclosure.

Calibration Guidelines

Once the Chillgard LE Refrigerant Monitor is operating, perform periodic calibration checks to ensure proper instrument operation.

Perform calibration to monitor long-term changes (drift) in both the ZERO and SPAN readings. If there is an unacceptable change in either of these readings, make adjustments to obtain proper readings.

When routine calibration does not restore proper readings, perform the procedures outlined under "Initial Calibration."

If following Calibration procedures fails to restore proper readings of the instrument, see Section 5, "Troubleshooting Guidelines" for guidelines to correct the instrument.

Keep written records of the calibration readings obtained and any adjustments made. Analysis of these records enables review and control of the time between checks.

Check a new Chillgard LE Refrigerant Monitor installation at least once a week by performing the steps outlined in the following section.

Calibration Equipment

Calibration of the monitor requires a supply of:

- **ZERO GAS** (nitrogen) It may be possible to use ambient air if you are sure it does not contain any possible interferant gases or contaminants.
- **SPAN GAS** (A known gas concentration that measures approximately 10% of the full-scale calibration of the unit.

Carefully apply both ZERO gas and SPAN gas to the unit to avoid pressurizing the internally mounted sensing cell. See TABLE 5-3, "Calibration Accessories Parts List" for the appropriate calibration parts and calibration gases available for the Chillgard LE Refrigerant Monitor.

The following equipment is required to calibrate the unit:

- Calibration Gas
- Meter capable of monitoring the output, in milliamps.

Calibration Check Procedure

The calibration procedure involves checking the SPAN and ZERO readings on the instrument.

During the calibration check procedure, any control instrumentation connected to the Chillgard LE Refrigerant Monitor may activate. Disconnect or disable any equipment or alarms connected to the monitor during the calibration procedure.

Applying Calibration Gases to the Instrument

Arrange Span and Zero gas cylinders with regulator, tubing, and cal cap as shown in FIGURE 4-2. Refer to FIGURE 3-6 for the calibration menus.

⚠ WARNING

Refrigerant Hazard!
During calibration, the Chillgard LE Monitor is not sampling and monitoring the intended area. Exercise caution in the area as appropriate. Failure to do so may result in death or serious personal injury.

1. Connect the ZERO gas cylinder to the sample tubing.
2. Open the regulator valve to allow the ZERO gas to flow freely to the instrument. Supply the instrument with gas for at least five minutes. If the reading differs significantly from zero, perform the “Initial Calibration” procedure again.
3. Close the regulator valve and remove the ZERO gas cylinder from the sample tubing.
4. Connect the 100 ppm gas cylinder to the sample tubing.
5. Open the regulator valve to allow the SPAN gas to flow freely to the instrument. Supply the instrument with gas for at least five minutes. If the reading differs significantly from 100 ppm, perform the “Initial Calibration” procedure again.
6. Close the regulator valve and remove the SPAN gas cylinder from the sample tubing.
7. Remove tubing and calibration cap from the sensing cell on the unit.
8. Re-connect or enable all equipment and alarm devices connected to any control equipment monitoring the Chillgard LE Refrigerant Monitor.

9. Reinstall the light gray cover.

⚠ CAUTION

Equipment Failure!
Do not leave any alarm device or equipment disabled or disconnected during normal operation of the instrument; otherwise, the equipment will not function as intended when the instrument detects an alarm situation. Failure to do so may result in serious personal injury.

Single or Four-Point Pumped Version Calibration

Introduction

As with any type of gas monitor, the only true check of its performance is to apply gas directly to the sensor.The frequency of the calibration gas test depends on the operating time and exposures of the sensors. New monitors should be calibrated more often until the calibration records prove stability. The calibration frequency can then be reduced to the schedule set by the safety officer or plant manager.

Perform the calibration procedure regularly and maintain a log of calibration adjustments. Calibration frequency may increase for a variety of reasons. If calibration cannot be performed at any step, STOP; consult MSA at 1-800-MSA-INST.

Calibration Equipment

Equipment needed:

- Calibration Kit (MSA ATO #50; FIGURE 4-3)
- A SPAN gas cylinder
- Optional ZERO gas cylinder.
  - A ZERO gas cylinder may not be needed.

Tube and Tee Assembly
(P/Ns 603806 and 636866)

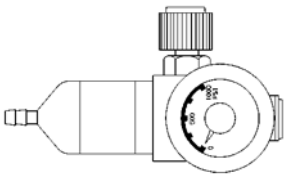

1.5 LPM Flow Controller (P/N 478358)

Connector Assembly (P/N 711533)

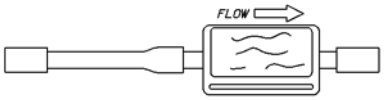

Span Gas Scrubber (P/N 803874)
(Replace protective caps after use.)

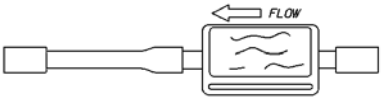

Zero Gas Scrubber (P/N 803873)
(Replace protective caps after use.)

Figure 4-3. Kit Components

The Calibration Kit contains a ZERO gas scrubber which can be used in place of a ZERO gas cylinder if the ambient air around the Chillgard LE contains little or no refrigerant.

Relative humidity may have a small effect on the output of the unit. If dry gas is used, Nafion Tubing (P/N 813628) can be used to humidify the sample stream going to the monitor.

⚠ CAUTION

The zero gas scrubber must be replaced periodically. The frequency of replacement depends on the concentration of the ambient refrigerant vapors.

The SPAN or ZERO cylinders (if needed) may be included with the Calibration Kit; cylinders shown in TABLE 4-1 are available from MSA.

Table 4-1. RP Calibration Gases

DESCRIPTION	CONCENTRATION	PART NO.
R-11 in Nitrogen	100 ppm	803499
R-12 in Nitrogen	100 ppm	804866
R-123 in Nitrogen	100 ppm	803498
R-134A in Nitrogen	100 ppm	803500
R-22 in Nitrogen	100 ppm	804868

Become familiar with the Calibration Kit components (FIGURE 4-3).

⚠ WARNING

Exercise care during the span calibration to ensure that the unit can accurately detect refrigerant gas. Improper calibration can cause improper readings across the full-scale range of the monitor.

Calibration Procedures

Preparation for Calibration

To verify the instrument is operating properly and to make initial calibration adjustments, perform the following:

1. Remove the light gray cover to open the enclosure.

⚠ CAUTION

Do not remove the cover unless the instrument is protected from splashing, spraying, or dripping water; otherwise, damage to the internal components may result.

2. Deactivate the equipment connected to the outputs, or disconnect the wiring to the outputs.

⚠ CAUTION

If any control instruments connected to the Chillgard LE Refrigerant Monitor are wired to external devices (e.g., horns, exhaust fans, and fire suppression systems), these devices may activate while adjustments or repairs are

performed during the following procedures.

To prevent activating these devices while adjusting the Chillgard LE Refrigerant Monitor, disconnect the wiring from the relay. Return all wiring to the relay when the calibration procedure is completed.

Before calibrating the Chillgard Monitor, leak-check the sample line(s) connected to the monitor:

1. Temporarily block the sample inlet at the end-of-line filter(s) and verify that the monitor gives a Fault alarm.
2. After checking for leaks, remove the sampling line for the Chillgard inlet.
3. Attach the Calibration Kit connector assembly to the inlet.

Initial Calibration

1. Using the tubing and calibration adapter, place zero gas on the unit (FIGURE 4-4 or FIGURE 4-5). Allow five minutes for a stable reading.
2. If necessary, rezero the unit as shown in the software menus (FIGURE 3-5).
3. Close the regulator valve and remove the zero gas from the sampling tubing.
4. Apply 100 ppm span gas to the unit for a minimum of five minutes (FIGURE 4-6).
5. If necessary, span the unit as shown in the software menu (FIGURE 3-4).
6. Close the regulator valve and remove the span gas from the sampling tubing.
7. Remove all calibration accessories from the unit to return to normal operation.

Calibration Guidelines

Once the Chillgard LE Refrigerant Monitor is operating, perform periodic calibration checks to ensure proper instrument operation.

Perform calibration to monitor long-term changes (drift) in both the ZERO and SPAN readings. If there is an unacceptable change in either of these readings, make adjustments to obtain proper readings.

When routine calibration does not restore proper readings, perform the procedures outlined under "Initial Calibration."

If following Calibration procedures fails to restore proper readings of the instrument, see Section 5, "Troubleshooting Guidelines" for guidelines to correct the instrument.

Keep written records of the calibration readings obtained and any adjustments made. Analysis of these records enables review and control of the time between checks.

Check a new Chillgard LE Refrigerant Monitor installation at least once a week by performing the steps outlined in the following section.

Calibration Equipment

Calibration of the monitor requires a supply of:

- **ZERO GAS** (nitrogen) It may be possible to use ambient air if you are sure it does not contain any possible interferant gases or contaminants.
- **SPAN GAS** (A known gas concentration that measures approximately 10% of the full-scale calibration of the unit.

Carefully apply both ZERO gas and SPAN gas to the unit to avoid pressurizing the internally mounted sensing cell. See TABLE 5-2, "Calibration Accessories Parts List" for the appropriate calibration parts and calibration gases available for the Chillgard LE Refrigerant Monitor.

The following equipment is required to calibrate the unit:

- Calibration Gas
- Meter capable of monitoring the output, either milliamps or volts.

Calibration Check Procedure

The calibration procedure involves checking the SPAN and ZERO readings on the instrument. During the calibration check procedure, any control instrumentation connected to the Chillgard LE Refrigerant Monitor may activate. Disconnect or disable any equipment or alarms connected to the monitor during the calibration procedure.

Zeroing the Monitor

When zero gas is required, attach a zero gas scrubber or zero gas cylinder to the connector as shown in FIGURES 4-4 and 4-5.

⚠ WARNING

If the sampling line is not re-attached, the monitor cannot sample from the remote location.

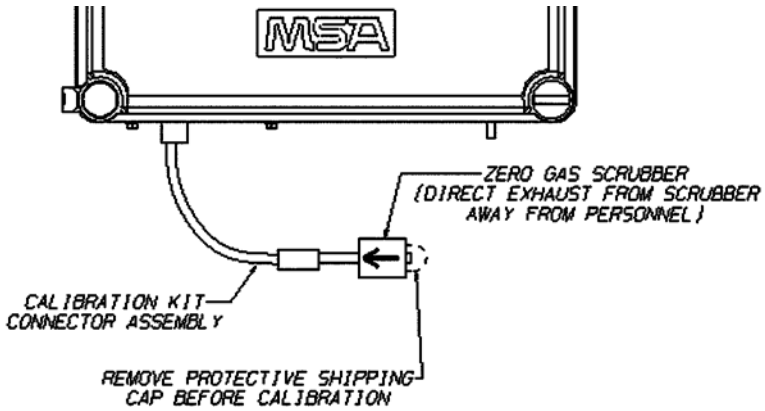

Figure 4-4. Using Zero Scrubber for Zero Calibration

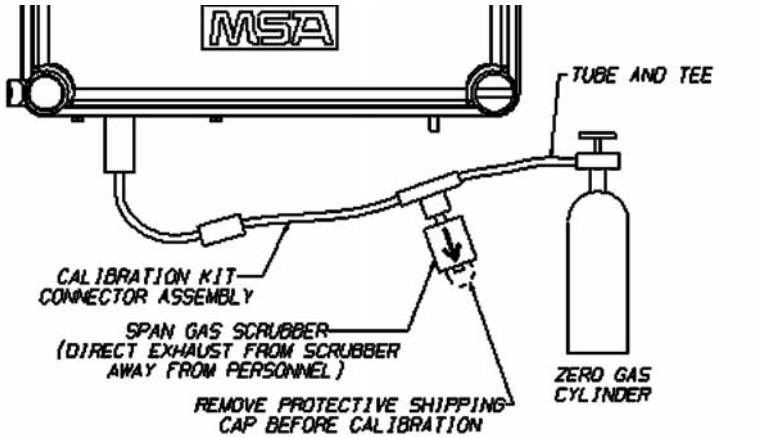

Figure 4-5. Using Zero Gas Cylinder for Zero Calibration

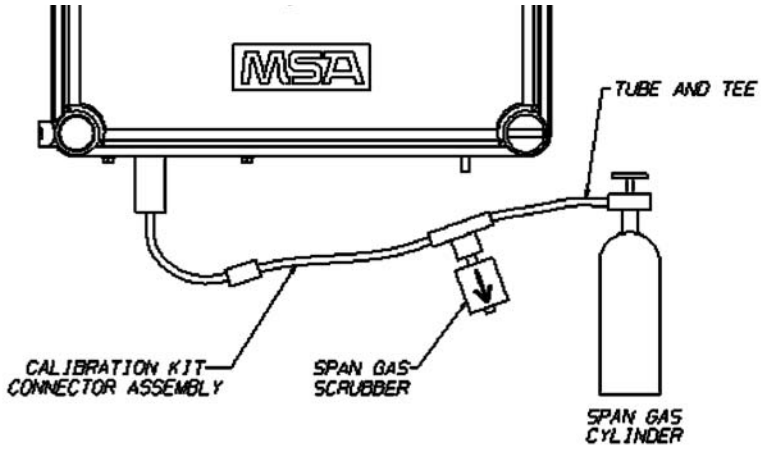

Figure 4-6. Span Calibration

⚠ CAUTION

During calibration, the Chillgard LE Refrigerant Monitor is not sampling and monitoring the intended area. Exercise caution in the area as appropriate.

1. Connect the ZERO gas cylinder (if used) to the sample tubing.
2. Open the regulator valve to allow the ZERO gas to flow freely to the instrument. Supply the instrument with gas for at least five minutes. If the reading differs significantly from zero, perform the “Initial Calibration” procedure again.
3. Close the regulator valve and remove the ZERO gas cylinder from the sample tubing.
4. Connect the 100 ppm SPAN gas cylinder to the sample tubing. Ensure the tee is located between the cylinder and the sensing cell.
5. Open the regulator valve to allow the SPAN gas to flow freely to the instrument. Supply the instrument with gas for at least five minutes. If the reading differs significantly from 100 ppm, perform the “Initial Calibration” procedure again.
6. Close the regulator valve and remove the SPAN gas cylinder from the sample tubing.
7. Remove tubing from the sensing cell on the unit.

8. Re-connect or enable all equipment and alarm devices connected to any control equipment monitoring the Chillgard LE Refrigerant Monitor.

10. Reinstall the light gray cover.

⚠ CAUTION

Do not leave any alarm device or equipment disabled or disconnected during normal operation of the instrument; otherwise, the instrument will not function as intended when it detects an alarm situation.

Chapter 5
Service and Replacement Parts

Troubleshooting Guidelines

The Chillgard LE Refrigerant Monitor is designed to provide long and trouble-free monitoring.

If repairs are indicated, it is possible the user can diagnose and correct the problem using the following:

- Troubleshooting Guidelines (TABLE 5-1)
- Replacement Parts List (TABLE 5-2)
- Accessories Parts Lists (TABLE 5-3)

⚠ WARNING

Hazardous Voltage!

Disconnect all electric power, including remote disconnects before servicing. Follow proper lockout/tagout procedures to ensure the power cannot be inadvertently energized. Failure to disconnect power before servicing could result in death or serious injury.

Table 5-1.Troubleshooting Guidelines

SYMPTOM	SOLUTION
No Output/ Power LED does not Light (no power)	Check and correct AC input power.
	Check AC wiring. and check for loose wires on terminal barrier input
	Check wiring to unit power supply; remove power supply cover and check fuse; replace if necessary
	Check for 24 VDC power supply output
	Replace LED board
Beacon will not Light when in Alarm 3 (beacon alarm)	Check that plug is connected to circuit board
	Check that the unit has exceeded Alarm 3
	Replace beacon assembly
No Analog Output	Check connection on board to 4-20 mA output
	Check board output with meter
	Replace circuit board

Table 5-1.Troubleshooting Guidelines (cont.)

SYMPTOM	SOLUTION
No RS-485 Communication	Check connection and polarity on board to RS-485 output
	Check and correct dip switch address and repower unit
	Replace circuit board
Noisy Output	Check input power
	Check tubing connection between optical bench and sound dampening element
	Replace optical bench
Calibration has Significantly Changed from Previous Reading	Check that gas is properly applied
	Clear inlet of particle matter
	Replace optical bench
Pump Not Running	Cycle the power and observe the pump; the FAULT light should be OFF
	Replace pump and cycle power; FAULT light should be OFF
	Replace the circuit board
FAULT Light Turns ON	Check the IR bench lamp; it must be flashing Replace optical bench
	For the unit equipped with pump, check the in-line filter, check tubing for leaks, and check for adequate flow rate
	Check if pump is electronically connected
	Check if pump is running
	Remove tubing from inlet and outlet
	Check if Sequencer manifold (if applicable) is electronically connected
	Check if the inlet line or filters are blocked
Under-range failed (zero limit is minus 20 ppm)	Adjust display zero to 0.0 via the keypad with zero air or zero scrubber applied
	Check the zero air cylinder; replace if necessary
	Check the zero scrubber; replace if necessary
Calibration failed (coefficients out of range)	Replace zero scrubber or change zero air supply
	Check span gas supply
	Check all tubing, filters and fittings for leaks
	For all sequencer units, make sure unit is locked on the selected

Table 5-1.Troubleshooting Guidelines (cont.)

SYMPTOM	SOLUTION
	sample port used for calibration\
	Leak-test the flow system
	Return the unit to MSA for service
Sensor flow failed (leaky or blocked sample line)	Remove all input lines to the sensor module
	Attach one line at a time to check for sample input
	Check all end-of-line filters; sample flow failure is always the present point being sampled
	Check operation of all manifold sample valves
	Leak test the flow system
	Return the unit to MSA for service
Sensor temperature range failed (checks for temperature range of over 67°C)	Check the connection of the IR source into the motherboard
	Replace optical bench
	Return to MSA for service
Memory protect (checks checksum of setup and cal values)	Replace the control board
	Return to MSA for service
External reset failed (checks the external reset button)	If not used, check for jumper
	If used, verify switch is wired normally-closed
Display failure (display communications)	Repower unit
	Check for broken or cracked display
	Replace display
Audio alarm failure (audio alarm)	Check output terminals
	Check for faulty horn buzzer

***⚠ WARNING: Exercise caution as potential shock hazard exists**

Table 5-2. Replacement Parts List

COMPONENT/ASSEMBLY		PART NO.
Diffusion R-11	Optical Bench	10052377
Diffusion R-12	Optical Bench	10052378
Diffusion R-22	Optical Bench	10052379
Diffusion R-123	Optical Bench	10052380
Diffusion R-134 A	Optical Bench	10052421
Diffusion Sound Dampening Element		10032706
Calibration Cap		10034395
Power Supply		10034189
Power Filter		10034402
Diffusion Sensor PCB Assembly		10031467
LED Display		10039025
LED Cable Assembly		10034517
Four-Point Manifold Assembly		10033554
Strobe		634674
External Filter		711561
Pump Sound Dampening Element		10037529
Pump		10037963
Pumped Sensor Printed Circuit Board Assembly		10035346
Pumped R-11 Optical Bench		10052422
Pumped R-12 Optical Bench		10052423
Pumped R-22 Optical Bench		10052424
Pumped R-123 Optical Bench		10052425
Pumped R-134 A Optical Bench		10052426
In-Line Filter		10037357
Tubing Assembly		10037896
Pressure Sensor		10032335
Printed Circuit Board Assembly, Control		10033233
Printed Circuit Board, Membrane Switch		10034274
Strobe Light, red, 24 VDC		634674
Buzzer		637123
Horn		10035633

Table 5-3. Calibration Accessories Parts List

COMPONENT/ASSEMBLY		PART NO.
REFRIGERANT CALIBRATION GAS (IN AIR)	100 ppm R123	803498
	100 ppm R11	803499
	100 ppm R12	804866
	100 ppm R22	804868
	100 ppm R134a	803500
ZERO Air		801050
Calibration Box		10035292

Service and Assistance

When ordering replacement parts or to obtain assistance regarding any problem with the Chillgard LE Refrigerant Monitor, please provide the following information (found on a label located on the side of the instrument):

- serial number
- model number.

To obtain parts and/or assistance, contact the nearest MSA representative or write or call:

Mine Safety Appliances Company
Sales Department
P.O. Box 427, Pittsburgh, PA 15230

1-800-MSA-INST.

Chapter 6
Data Logging

Log Size

The Chillgard LE unit allows 1,078 sets of data and events to be logged. This data is either the maximum or average of the “last” data calculated. The structure of the data stored and transmitted is shown in Appendix C. The download can be initiated by sending the ASCII character “L” or “0x4C.”

Last Values

The maximum value is taken from the ‘last’ data; this is always the highest value displayed. The average is an average of ‘last’ data values.

Number of Data Points Used

If the unit is only a single point monitor or all but one point is inactive, the value is recorded continuously. With four points active, 250 values per point are recorded every hour. the number of values can be considerably lower if the monitor enters extended dwell because of high gas concentrations.

User Setup Options

Concentrations are recorded either every 15 minutes or hourly (FIGURE 3-15). If the logging function is turned OFF, the clock/calendar chip is stopped to save battery energy.

- Before the logging is turned ON, the clock/calendar must be set.

Setting any value starts the clock/calendar. Hours or days may be skipped or repeated. The log can be cleared in the Setup Menu.

Viewing Alarms/Events and Data

From the Review Data Screen, the user can view the recorded concentrations. The particular point must be selected. Again, the latest data is presented first; when the memory is filled, the entries wrap around.

Appendix A
Installation Outline Drawings

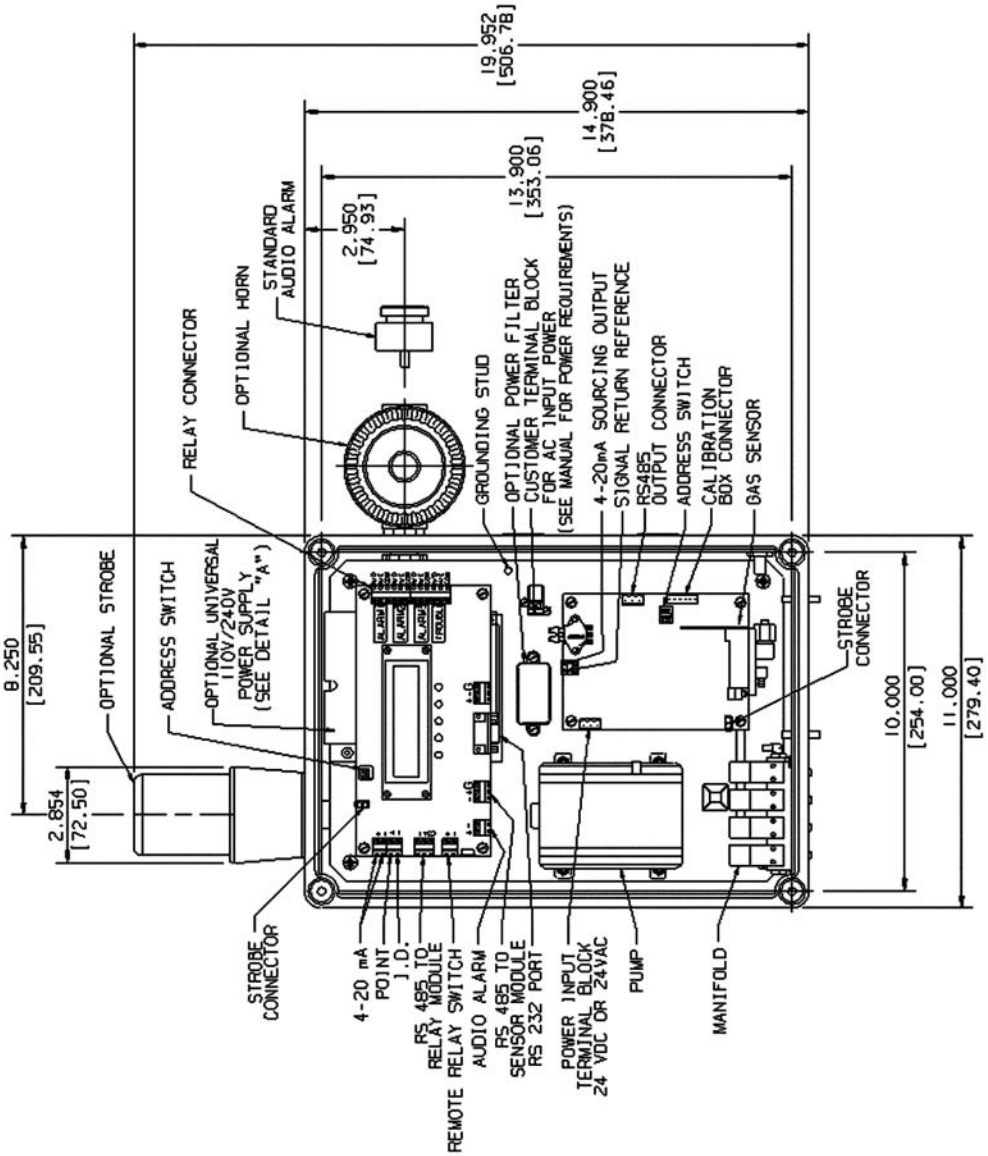

Figure A-1. Chillgard LE Installation Drawing

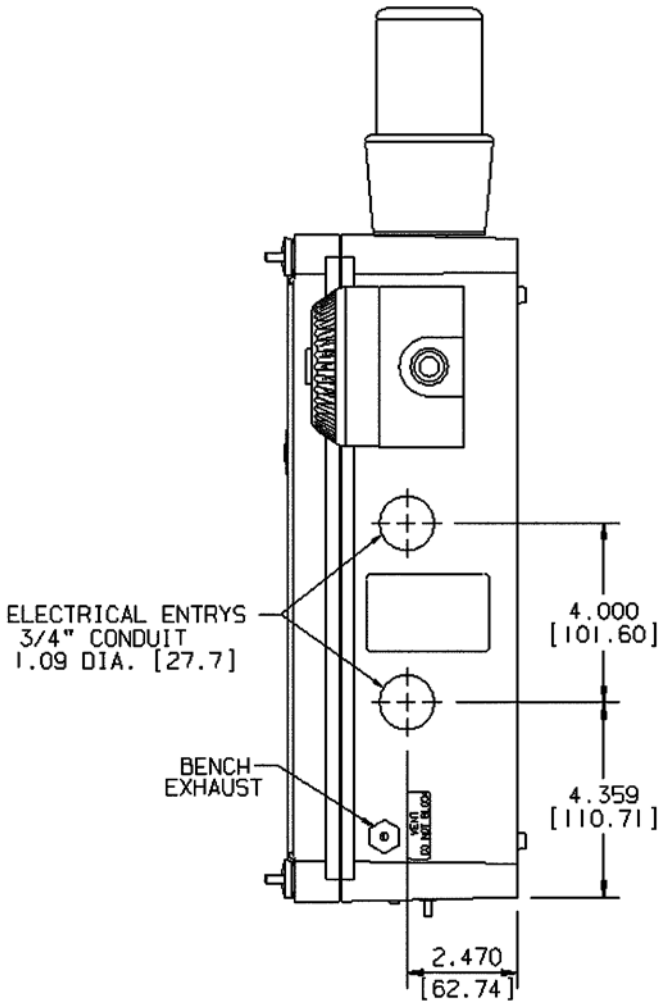

Figure A-2. Installation Drawing Continued

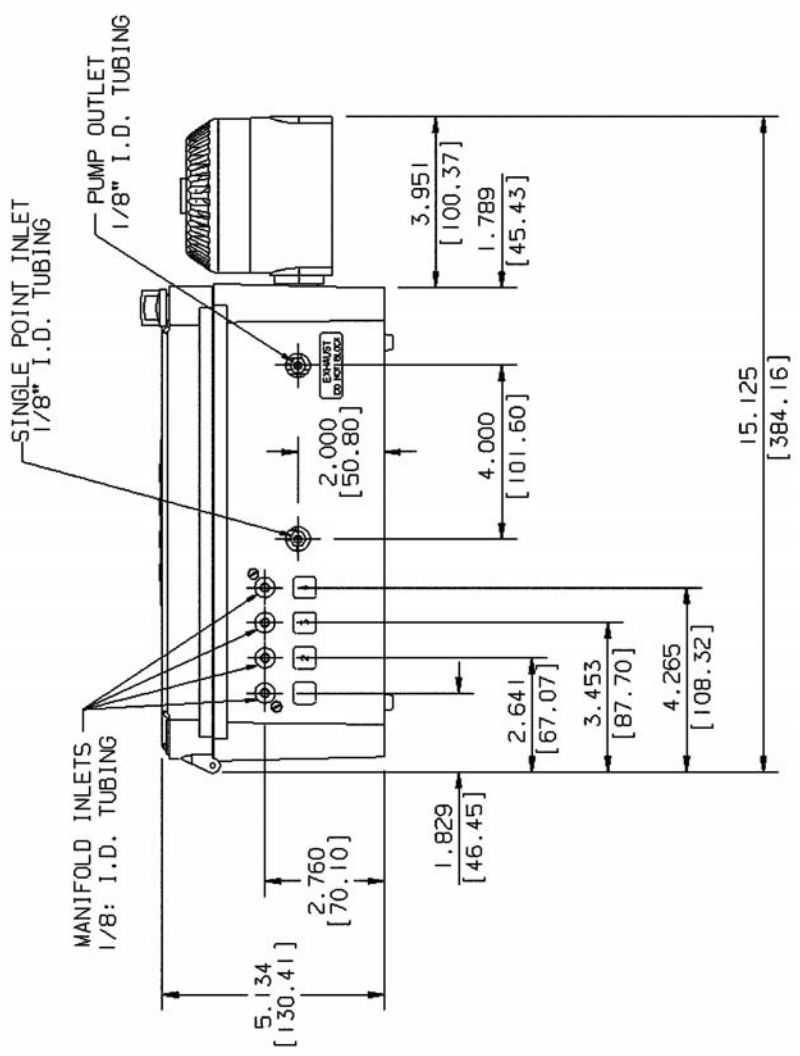

Figure A-3. Installation Drawing Continued

Chillgard LE Refrigerant Monitor
Startup Report

Project : _____ **Date:** _____

Model #: _____ **Serial No:** _____

Customer: _____ **Tech:** _____

Notes: _____

Unit

Power: _____

Display: _____

Tubing: 1 2 3 4

Filters: 1 2 3 4

Diagnostics OK

Installation Notes_____

_____

Calibration

Channel _____

Gas Used _____

Span []_____

Zero []_____

Cal Chck []_____

Line Length

[] 1 _____

[] 2 _____

[] 3 _____

[] 4 _____

Sequence

1 2 3 4

Lock Yes / No

Alarms

Caution _____PPM

Warning _____PPM

Alarm _____PPM

Latching

Caution Latch / Unlatch

Warning Latch / Unlatch

Alarm Latch / Unlatch

Alarm Relays

Caution DeEnerg / Energ.

Warning DeEnerg / Energ.

Alarm DeEnerg / Energ.

Audio Alarms

Caution No Audio / Set

Warning No Audio / Set.

Alarm No Audio / Set

Trouble No Audio / Set

Analog Output

Cal mA Read Neg

mA 100% 10%

Cal V Read Neg

Cal mA Read 2mA

Lengths Metric English

Time

Done []_____

Logging

Rate Hour /15 Min /Off

Values Max Ave

Password

Set Enable / Disable

Password _____

Additional Information: (Special applications, configurations, recommendations, etc.)

Appendix B
RS-485 Output

The sensor module uses an RS-485 serial interface with Modbus protocol. To communicate to the RS-485 output via a computer interface, an isolated RS-485 converter (such as P/N 10014359) should be used. The baud rate is 19,200 baud with RTU format sent. Each byte has eight bits with no parity and two stop bits. Each exchange has a two-byte CRC 16 check value.

The sensor unit has an ID range of 100 - 107. The dip switch positions 1 through 3 are binary encoded and read on startup.

Table B-1. Dip Switch Positions

ID	DIP SWITCH			
	1	2	3	4
100	0	0	0	-- *
101	1	0	0	--
102	0	1	0	--
103	1	1	0	--
104	0	0	1	-- *
105	1	0	1	--
106	0	1	1	--
107	1	1	1	--
NOTE: 1 indicates closed.				
* indicates valid address for a four-point pumped unit.				

Two functions are supported:

- Read Holding Registers - Function #3
- Preset Multiple Registers - Function #16

Table B-2. Sensor Unit Register Addresses

TITLE	REGISTER ADDRESS	READ/ WRITE	DEFINITION OF ENCODED DATA	
Fault & Module State	40001	R	Cal Sum	1 msb
			Under Range	2 msb
			Flow Loss	4 msb
			Under Voltage	8 msb
			Temperature	10 msb
			Prog Cksum	20 msb
			Lamp Fail	40 msb
			Warm Up	0 lsbJ
			Normal	1 lsb
			Cal/Setup	2 lsb
			Factory	4 lsb
			Trouble	8 lsb
Gas Number	40002	R	0 to 44	lsb
Gas Concentration	40003	R	-20 to 1050	
Alarm State	40004	R	None	0 lsb
			Caution	1 lsb
			Warning	2 lsb
			Alarm	3 lsb
Module Zero	40006	R/W	-100 to 100	
Module Span	40007	R/W	500 to 2000	
Analog Range	40010	R/W	10 or 100% full scale	
MA Zero	40011	R/W	0 to 1000	
MA Span	40012	R/W	1000 to 3000	
Caution Level	40013	R/W	30 to 980	
Warning Level	40014	R/W	40 to 990	
Alarm Level	40015	R/W	50 to 1000	

Appendix C
RS-232 Output

Introduction

Your Chillgard LE Monitor is ordered and built for the particular types of gas in use. The monitor full-scale range may differ from the standard 0 to 1000 ppm range.

The instrument is ready to monitor; however, it is necessary to configure the unit to your specific requirements. Your chillgard LE Monitor may be connected to Multi-Point Sequencer(s), enabling your unit to sample from up to four individual sampling locations.

Your unit also contains several other features described in this appendix:

- RS-232 output
- Password protection
- Remote FRont Panel capability
- Sampling point identification.

RS-232 Output

The RS-232 output broadcasts certain information about the Chillgard LE Monitor (TABLE C-3). This output conforms to the specification for RS-232 signal levels and is capable of driving its signal up to 200 feet when using low capacitance RS-232 cable.

Connection to the RS-232 output is via a 9-pin sub “D” female connector.

When connecting Rs-232 cable to the instrument:

- The strain relief cover or shell on the 9-pin sub “D” connector must be removed. It is not possible to use a pre-wired or molded cable because its shell or strain relief is not removable. The connector’s shell or strain relief does not fit within the instrument.
- It may be necessary to remove the metal covers from the printed circuit boards to attach the 9-pin sub “D:” connector to its mate on the unit. If the metal covers are removed, replace them when the cable’s connector is mated to the connector on the printed circuit board.

Table C-1. RS-232 Parameters

COMMUNICATION PARAMETERS	9600 Baud
	8 bits
	No parity
	One stop bit

The log data is an array of structures. The array size is 1080 and the structure length is 22 bytes. The first byte is a sync character “R” followed by 23,760 bytes. The first structure is the Log information.

Table C-2. Information Structure (Chillgard LE Monitor)

ITEM NO.	DESCRIPTION	VALUE OR TYPE	SIZE (BYTES)
0	Monitor type	ASCI “R”	1
1	Monitor type	ASCI “L”	1
2	Monitor type	ASCI “C”	1
3	Scale	char 0x03	1
4	ID Number	unsigned integer	2
5	Year (0 - 99)*	bcd number	1
6	Month (1 - 12)	bcd number	1
7	Date (1 - 31)	bcd number	1
8	Hour (0 - 23)	bcd number	1
9	Minute (0 - 59	bcd number	1
10	Average or Max	bcd number	1
11	Point 1 Gas Type	char	1
12	Point 2 Gas Type	char	1
13	Point 3 Gas Type	char	1
14	Point 4 Gas Type	char	1
15	Point 5 Gas Type	char	1
16	Point 6 as Type	char	1
17	Point 7 Gas Type	char	1
18	Point 8 Gas Type	char	1
19	Sequencer Points	char	1
20	Log Index	unsigned integer	2
Total			23

***The base/year is 2000.**
The last structure is filled with Oxff.

The information structure is followed by data and event structures. Data structures are always identified by Alarm/Event value of 0x01. Empty structures have Alarm/Event value of 0x00.

Table C-3. Data Structure

ITEM NO.	DESCRIPTION	VALUE OR TYPE	SIZE (BYTES))
1	Alarm or Event	char = 0x00	1
2	Year*	bcd	1
3	Month	bcd	1
4	Date	bcd	1
5	Hour	bcd	1
6	Minute	bcd	1
7	Concentration Point 1	integer	2
8	Concentration Point 2	integer	2
9	Concentration Point 3	integer	2
10	Concentration Point 4	integer	2
11	Concentration Point 5	integer	2
12	Concentration Point 6	integer	2
13	Concentration Point 7	integer	2
14	Concentration Point 8	integer	2
Total			22

***The base/year is 2000.**

Table C-4. Alarm Structure

ITEM NO.	DESCRIPTION	VALUE OR TYPE	SIZE (BYTES)
1	Alarm or Event	char	1
2	Year	bcd	1
3	Month	bcd	1
4	Date	bcd	1
5	Hour	bcd	1
6	Minute	bcd	1
7	Point (1 - 8)	char	1
8	Spaces	0x00	15
Total			22

***The base/year is 2000.**

Table C-5. Alarms and Events

DATA	CONCENTRATION	0x01
ALARMS	LOG_ALARM 1	0x02
	LOG_ALARM 2	0x04
	LOG_ALARM 3	0x08
EVENTS	LOG_WARMUP	0x10
	LOG_READY	0x20
	LOG_FAULT	0x40
	LOG_CAL_SETUP	0x80